Appendix K-2

Master Project Specific Water Quality Management Plan

Master Project Specific Water Quality Management Plan

*A Template for Projects located within the **Santa Ana Watershed** Region of Riverside County*

Project Title: Master Meridian West Campus Upper Plateau

Development No: TBD

Design Review/Case No: TBD

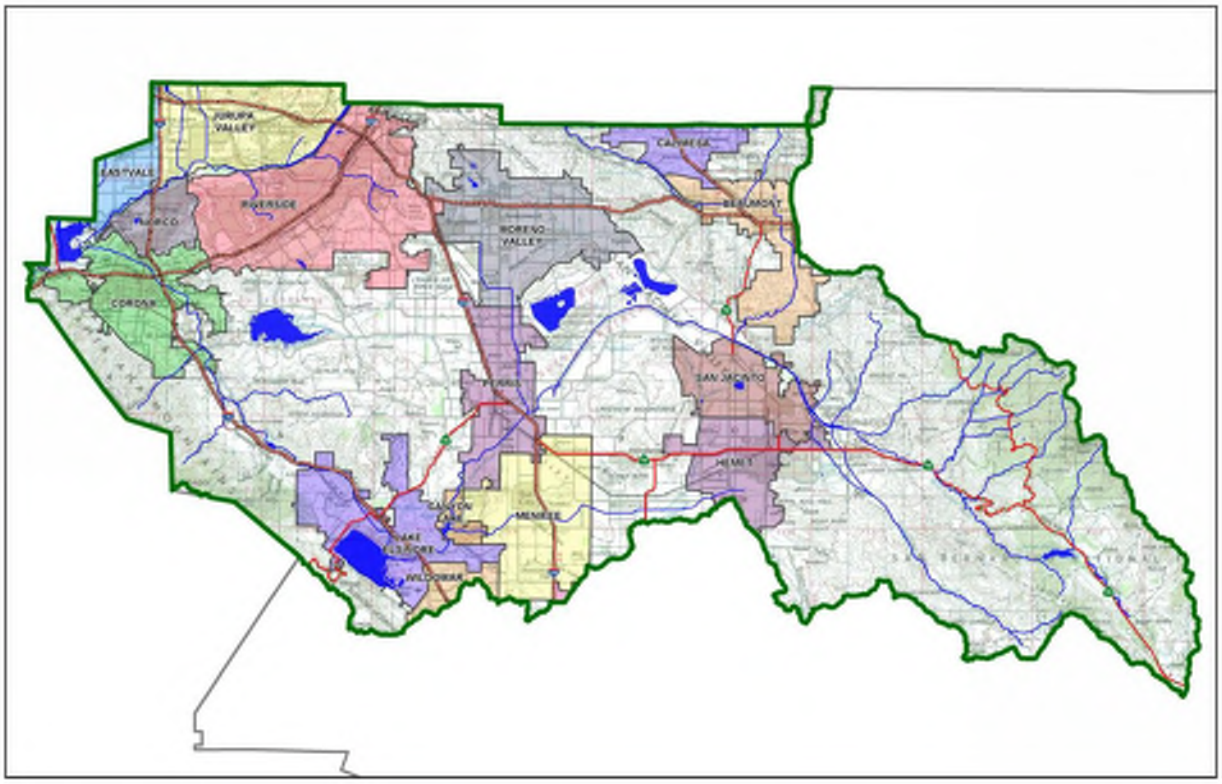

☒ **Preliminary**
☐ **Final - Master**

Original Date Prepared: September 14, 2021

Revision Date(s): ___

Prepared for Compliance with
Regional Board Order No. **R8-2010-0033**

Contact Information:

Prepared for:
Meridian Park LLC
1156 N. Mountain Avenue
Upland, CA 91786
(909) 579-1294
Contact: Jeff Gordon

Prepared by:
DRC Engineering, Inc.
160 South Old Springs Road, Suite 210
Anaheim Hills, CA 92808
(714) 685-6860

A Brief Introduction

This Project-Specific WQMP Template for the **Santa Ana Region** has been prepared to help guide you in documenting compliance for your project. Because this document has been designed to specifically document compliance, you will need to utilize the WQMP Guidance Document as your "how-to" manual to help guide you through this process. Both the Template and Guidance Document go hand-in-hand, and will help facilitate a well-prepared Project-Specific WQMP. Below is a flowchart for the layout of this Template that will provide the steps required to document compliance.

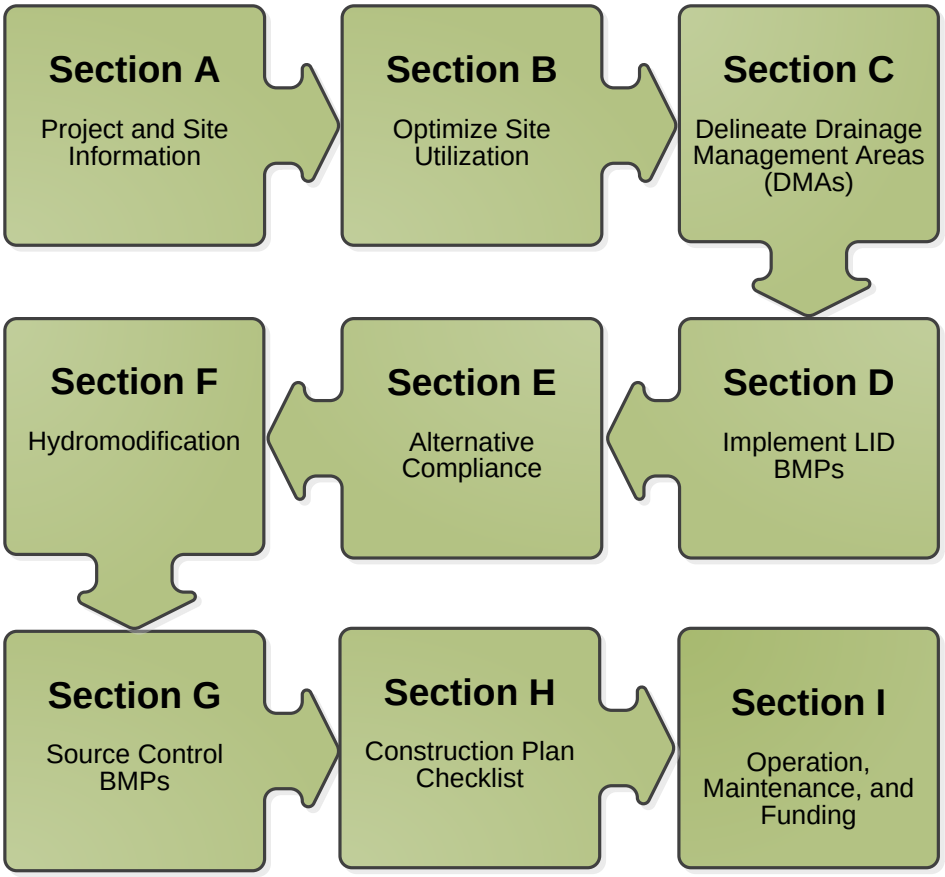

OWNER'S CERTIFICATION

This Project-Specific Water Quality Management Plan (WQMP) has been prepared for Meridian Park LLC by DRC Engineering, Inc. for the Master Meridian West Campus Upper Plateau project. (W20-000-020)

This WQMP is intended to comply with the requirements of March JPA Section 1.8 which includes the requirement for the preparation and implementation of a Project-Specific WQMP.

The undersigned, while owning the property/project described in the preceding paragraph, shall be responsible for the implementation and funding of this WQMP and will ensure that this WQMP is amended as appropriate to reflect up-to-date conditions on the site. In addition, the property owner accepts responsibility for interim operation and maintenance of Stormwater BMPs until such time as this responsibility is formally transferred to a subsequent owner. This WQMP will be reviewed with the facility operator, facility supervisors, employees, tenants, maintenance and service contractors, or any other party (or parties) having responsibility for implementing portions of this WQMP. At least one copy of this WQMP will be maintained at the Project Site or project office in perpetuity. The undersigned is authorized to certify and to approve implementation of this WQMP. The undersigned is aware that implementation of this WQMP is enforceable under March JPA Section 1.8.

"I, the undersigned, certify under penalty of law that the provisions of this WQMP have been reviewed and accepted and that the WQMP will be transferred to future successors in interest."

Owner's Signature	Date
Jeff Gordon	Sr. Vice President, Development
Owner's Printed Name	Owner's Title/Position

PREPARER'S CERTIFICATION

"The selection, sizing and design of stormwater treatment and other stormwater quality and quantity control measures in this plan meet the requirements of Regional Water Quality Control Board Order No. **R8-2010-0033** and any subsequent amendments thereto."

Preparer's Signature	Date
Christopher McKee	Project Engineer
Preparer's Printed Name	Preparer's Title/Position

Preparer's Licensure:

Table of Contents

Section A: Project and Site Information 6
A.1 Maps and Site Plans 6
A.2 Identify Receiving Waters 10
A.3 Additional Permits/Approvals required for the Project: 10
Section B: Optimize Site Utilization (LID Principles) 11
Section C: Delineate Drainage Management Areas (DMAs) 12
Section D: Implement LID BMPs 19
D.1 Infiltration Applicability 19
D.2 Harvest and Use Assessment 20
D.3 Bioretention and Biotreatment Assessment 22
D.4 Feasibility Assessment Summaries 23
D.5 LID BMP Sizing 24
Section E: Alternative Compliance (LID Waiver Program) 44
E.1 Identify Pollutants of Concern 45
E.2 Stormwater Credits 46
E.3 Sizing Criteria 46
E.4 Treatment Control BMP Selection 47
Section F: Hydromodification 48
F.1 Hydrologic Conditions of Concern (HCOC) Analysis 48
F.2 HCOC Mitigation 49
Section G: Source Control BMPs 51
Section H: Construction Plan Checklist 58
Section I: Operation, Maintenance and Funding 60

List of Tables

Table A.1 Identification of Receiving Waters 10
Table A.2 Other Applicable Permits 10
Table C.1 DMA Classifications 12
Table C.2 Type 'A', Self-Treating Areas 14
Table C.3 Type 'B', Self-Retaining Areas 15
Table C.4 Type 'C', Areas that Drain to Self-Retaining Areas 16
Table C.5 Type 'D', Areas Draining to BMPs 17
Table D.1 Infiltration Feasibility 19
Table D.2 LID Prioritization Summary Matrix 23
Table D.3 DCV Calculations for LID BMPs 25
Table E.1 Potential Pollutants by Land Use Type 45
Table E.2 Water Quality Credits 46
Table E.3 Treatment Control BMP Sizing 46
Table E.4 Treatment Control BMP Selection 47
Table F.1 Hydrologic Conditions of Concern Summary 48
Table G.1 Permanent and Operational Source Control Measures 52
Table H.1 Construction Plan Cross-reference 58

List of Appendices

Appendix 1: Maps and Site Plans 63
Appendix 2: Construction Plans 65
Appendix 3: Soils Information 66
Appendix 4: Historical Site Conditions 67
Appendix 5: LID Infeasibility 68
Appendix 6: BMP Design Details 69
Appendix 7: Hydromodification 70
Appendix 8: Source Control 71
Appendix 9: O&M 72
Appendix 10: Educational Materials ..... - 6 -

Section A: Project and Site Information

PROJECT INFORMATION	
Type of Project:	Business Park (Light Industrial)
Planning Area:	March Joint Powers Authority (MJPA)
Community Name:	
Development Name:	Master Meridian West Campus Upper Plateau
PROJECT LOCATION	
Latitude & Longitude (DMS): 33°54'24" N, 117°18'27" W	
Project Watershed and Sub-Watershed: Santa Ana River Watershed, San Jacinto River Basin Sub-Watershed	
APN(s): Portions of 294-100-005, 294-110-006	
Map Book and Page No.: Thomas Guide Page 746, Grid F3, F4, F5, G3 and G4	
PROJECT CHARACTERISTICS	
Proposed or Potential Land Use(s)	Office, Manufacturing
Proposed or Potential SIC Code(s)	4225
Area of Impervious Project Footprint (SF)	11,177,409 SF (256.6 AC)
Total Area of proposed Impervious Surfaces within the Project Limits (SF)/or Replacement	11,177,409 SF (256.6 AC)
Does the project consist of offsite road improvements?	☒ Y ☐ N
Does the project propose to construct unpaved roads?	☐ Y ☒ N
Is the project part of a larger common plan of development (phased project)?	☒ Y ☐ N
EXISTING SITE CHARACTERISTICS	
Total area of existing Impervious Surfaces within the project limits (SF)	0 SF
Is the project located within any MSHCP Criteria Cell?	☐ Y ☒ N
If so, identify the Cell number:	N/A
Are there any natural hydrologic features on the project site?	☐ Y ☒ N
Is a Geotechnical Report attached?	☐ Y ☒ N
If no Geotech. Report, list the NRCS soils type(s) present on the site (A, B, C and/or D)	B,C
What is the Water Quality Design Storm Depth for the project?	0.60 inches

A.1 Maps and Site Plans

The Master Meridian West Campus Upper Plateau project (referred to hereon as "Upper Plateau") is located south of Alessandro Boulevard and west of California Interstate 215 within the March Joint Powers Authority area. Upper Plateau consists of seventeen (17) lots zoned as mixed-use, business park, industrial, streets, public facilities, undeveloped land, and park/open space. The scope of the project is approximately 370 acres with the existing terrain being made up of undeveloped, hilly land draining to seventeen (17) different watersheds. The expected impervious area upon project completion for the lots is estimated to be around 90%.

This WQMP will serve as a Master WQMP for the Meridian West Campus Upper Plateau area. In the future, each parcel will require a separate WQMP to be developed, and will follow criteria set forth in the 2012 WQMP Template and Guidance document. As individual parcels are developed, addendum WQMPs will be submitted. All addendum WQMPs will need to meet the requirements and approved approach of the final approved Master WQMP. If a lot is developed with a special type of usage (e.g., fueling site, hazardous waste storage), the lot will not be able to discharge to a permanent Best Management Practice (BMP) shared with an adjacent lot. A lot

with special usage will have to have its storm water discharge isolated from adjacent lots and public right-of-way, and either have dedicated BMPs onsite or discharge directly to the sewer depending on the activities present onsite.

Parcels should follow the LID hierarchy (Infiltration, Harvest and Reuse, and Biotreatment) when selecting the final LID for the development. In addition, source control BMPs should be implemented whenever possible. For example, landscaping should comprise approximately 10 percent of the site. Landscaped areas will be located throughout the parking area and around the buildings. Native drought tolerant plans will be chosen for efficient irrigation purposes.

The proposed Upper Plateau Project Site contains seventeen (17) watersheds that are delineated and shown in the Proposed Hydrology Map in Appendix 1. Each watershed is described in the table below:

Watershed	Acreage	Description	Downstream Destination
3	21.26	Surface flows to current dead end on Barton Street. No inlet structure, stormwater continues to flow down Barton Street into residential development.	Stormwater continues to flow north in residential development and outlets into Sycamore Canyon Wilderness Park. Creeks combine downstream and flow into Sycamore Dam to the northwest. Overflow from Sycamore Dam flows northwest to Santa Ana River.
4	3.09	Surface flows to residential development to the north. No drain inlet or pickup location.	
5	17.52	Surface flows to residential development to the north. No drain inlet or pickup location.	
6	2.95	Surface flows to residential development to the north. No drain inlet or pickup location.	
7	57.40	Surface flows to current dead end on Alexander Street. No inlet structure, stormwater continues to flow down Alexander Street into residential development.	
8	82.31	Surface flows to inlet structure to a 42" storm drain bypassing an existing development. Outlets and surface flows towards the SW corner of Meridian Parkway and Alessandro Boulevard. Enters storm drain, flows under Meridian Parkway and outlets at North Detention Basin (a part of the 1st phase of Meridian Business Park development).	Overflow from the detention basin flows Northwest through Sycamore Canyon Wilderness Park to Sycamore Dam to the northwest. Overflow from Sycamore Dam flows northwest Santa Ana River.
9	83.11	Surface flows to inlet structure and enters dual 36" storm drain pipes bypassing buildings to the west of Meridian Parkway. Storm drains continue to flow east under Meridian Parkway and into North Detention Basin (a part of the 1st phase of Meridian Business Park development).	
10	31.11	Flows to inlet structure and enters 54" storm drain south of Cactus Avenue. Storm drain continues to flow east under Meridian Parkway and into North Detention Basin (a part of the 1st phase of Meridian Business Park development).	
11	21.12	Flows to inlet structure and enters 30" storm drain that flows east under Authority Way and north under Meridian Parkway. Storm drain continues to flow east and outlets into North Detention Basin (a part of the 1st phase of Meridian Business Park development).	

12	34.26	Flows to inlet structure and through existing residential development to the southeast and outlets to creek flowing to the east. Picked up by inlet structure to a 30" storm drain that flows east under Authority Way and north under Meridian Parkway. Storm drain continues to flow east and outlets into North Detention Basin (a part of the 1st phase of Meridian Business Park development)	Overflow from the detention basin flows Northwest through Sycamore Canyon Wilderness Park to Sycamore Dam to the northwest. Overflow from Sycamore Dam flows northwest Santa Ana River.
13	11.00	Flows east through existing residential development and outlets near Bakal Drive and Orchard Park Drive. Flows southeast to regional Lot E/49 detention basin.	Overflow from Lot E/49 basin crosses under 215 freeway and enters Perris Valley Strom Drain. Further downstream stormwater passes through Canyon Lake, Lake Elsinore, and the Santa Ana River.
14	87.88	Flows east to inlet structure and enters 48" RCP flowing north under Barton Street. Storm drain turns to the west and outlets to existing creek that is a part of Watershed 17.	Creeks travel northwest towards Alessandro Dam. Overflow continues to flow through a creek northwest to Mary Street Dam. Overflow from Mary Street Dam continues underground and outlets at Santa Ana River.
15	15.74	Flows east to inlet structure and enters 48" RCP flowing north under Barton Street. Storm drain turns to the west and outlets to existing creek that is a part of Watershed 17.	
16	80.43	Flows to inlet structure and enters 57" storm drain through residential development flowing west and outlets to existing creek flowing Northwest.	
17	14.93	Surface flows to creek flowing northwest (see watersheds 14 & 15).	
1	15.66	Flows to inlet structure east of Cairn Street into 30" storm drain flowing east under Northrop Drive and north on Mission Grove Drive. Stormwater outlets at creek south of White Dove Lane.	
2	148.83	Flows to inlet structure at the top of Moray Court to a 72" storm drain. Stormwater flows west under Botany Bay Road and outlets south of Alice Springs Place into creek.	

The onsite, undetained flow rates have been computed based on the ultimate buildout of all streets and graded pads flowing into stormwater collection basins located in each lot. The grading of all watersheds has ensured that the value of the existing and proposed drainage management areas have stayed consistent and will not increase flow to any of the Project Site discharge outlets. The information shown in this report is consistent with the Upper Plateau Hydrology Report. In the built-out condition, onsite sheet flows are expected to be detained and treated prior to being routed to the proposed storm drain systems.

Runoff from proposed roadways constructed during Phase III of the Upper Plateau project will be routed to 36 in. – 48 in. detention tanks located within the landscape easements adjacent to the right of way. Reversed curb outlets located at the curb flow line will allow storm runoff to enter into the proposed earthen swale within the landscape easement that contains 12" atrium grates connected to each detention tank. The detention tanks are

sized to hold the respective 100-year storm volumes and release them over 48 hours. An estimated conservative volume of 6,000 cubic-feet/acre was used to meet this criterion. All detention tanks will include 2" drain lines leading to a 6"-12" storm drain line leading to the proposed Modular Wetland biotreatment units near the beginning of the streets.

Until such a time that the MJPA Landscape Lighting and Maintenance District Number 1 accepts the Upper Plateau development for maintenance, the owner shall be responsible for completing and maintaining inspection reports for all onsite Structural Source Control and Treatment Control BMPs. The MJPA is responsible for maintenance for all storm drain facilities 36" and smaller within the public right of way, and eventually bioswales within the landscape easement. All storm facilities larger than 36" shall be maintained by Riverside County Flood Control. The new owner will be responsible for maintenance of Structural Source Control and Treatment Control BMPs within their parcel.

The Post Construction BMP Site Plan is included as part of Appendix 1. All concept grading and drainage plans and other pertinent construction plans are included in Appendix 2.

A.2 Identify Receiving Waters

Table A.1 Identification of Receiving Waters

Receiving Waters	EPA Approved 303(d) List Impairments	Designated Beneficial Uses	Proximity to RARE Beneficial Use
San Jacinto Watershed			
Perris Valley Storm Drain	N/A	None	N/A
San Jacinto River	N/A	Intermittent beneficial use: Agricultural water supply; groundwater recharge; contact/non-contact recreation; warm freshwater habitat; and wildlife habitat	N/A
Canyon Lake	Nutrients, Pathogens	Municipal and domestic water supply; agricultural water supply; groundwater recharge; contact/non-contact recreation; warm freshwater habitat; wildlife habitat	N/A
Lake Elsinore	Nutrients, Organic Enrichment/Low Dissolved Oxygen, PCBs, Sediment Toxicity, Unknown Toxicity	Contact/Non-contact recreation; warm freshwater habitat; wildlife habitat	N/A
Santa Ana River			
Lake Mathews	N/A	Municipal and domestic water supply, agricultural water supply, industry service supply, industry process supply, groundwater recharge, contact/non-contact recreation, warm freshwater habitat, wildlife habitat, rare threatened or endangered species	N/A
Mockingbird Reservoir	N/A	Municipal and domestic water supply, agricultural water supply, industry service supply, contact/non-contact recreation, warm freshwater habitat, wildlife habitat	N/A

A.3 Additional Permits/Approvals required for the Project:

Table A.2 Other Applicable Permits

Agency	Permit Required	
State Department of Fish and Game, 1602 Streambed Alteration Agreement	☐ Y	☒ N
State Water Resources Control Board, Clean Water Act (CWA) Section 401 Water Quality Cert.	☐ Y	☒ N
US Army Corps of Engineers, CWA Section 404 Permit	☐ Y	☒ N
US Fish and Wildlife, Endangered Species Act Section 7 Biological Opinion	☐ Y	☒ N
Statewide Construction General Permit Coverage	☒ Y	☐ N
Statewide Industrial General Permit (Order No. 2014-0057-DWQ) *(tenant decadent)*	☐ Y	☒ N
Western Riverside MSHCP Consistency Approval (e.g., JPR, DBESP)	☐ Y	☒ N
Other *(please list in the space below as required)*	☐ Y	☐ N

Section B: Optimize Site Utilization (LID Principles)

This section documents the site constraints and opportunities for LID BMPs. Constraints include impermeable soils within the project area which preclude the use of infiltration BMPs. The site is underlain with soils having minimal infiltration rates such as bedrock described in the geotechnical report included in Appendix 3. Opportunities for LID include landscape buffers along Cactus Avenue, Determination Drive and Authority Way that serve a dual purpose for bioretention as shown on the WQMP Site plan in Appendix 1.

As the Lots are developed, opportunities might include maximizing existing natural areas, low areas that can double as self-retaining areas, landscape amenities including open space and buffers (which can double as locations for bioretention BMPs), differences in elevation (which can provide hydraulic head), and roof drains directed toward landscaped areas.

The 2010 Santa Ana MS4 Permit further requires that LID Retention BMPs (Infiltration Only or Harvest and Use) be used unless it can be shown that those BMPs are infeasible. As mentioned previously, poor soils at the Project Site do not allow for infiltration BMPs. Reclaimed water will be used for the non-potable water demands for the project; therefore, Harvest and Use BMPs need not be assessed for the Project Site. New recycled water lines will be constructed along Cactus Avenue, Determination Drive and Authority Way.

Site Optimization

The following questions are based upon Section 3.2 of the WQMP Guidance Document. Review of the WQMP Guidance Document will help you determine how best to optimize your site and subsequently identify opportunities and/or constraints, and document compliance.

Did you identify and preserve existing drainage patterns? If so, how? If not, why?

The proposed grading follows the existing drainage pattern as closely as possible. The natural drainage pattern varies through the site as there are seventeen (17) watersheds affected by the project.

Did you identify and protect existing vegetation? If so, how? If not, why?

The vegetation observed within the project area includes shrubs such as buckwheat, pepper trees, and typical small grasses. Existing vegetation will be disturbed during rough grading, but landscape plans will address adding of native plantings.

Did you identify and preserve natural infiltration capacity? If so, how? If not, why?

Based on the soils report for the Project Site prepared by _____[TBD]_____. dated ___[TBD]___, percolation test results do not meet the minimum 1.6 inches/hr for infiltration BMPs. This, as well as fairly shallow bedrock in the soil profile, results in infiltration not being considered suitable for the site.

Did you identify and minimize impervious area? If so, how? If not, why?

Proposed pervious area is shown to the maximum extent practicable while still allowing for another impervious site design requirements (i.e., amount of parking stalls)

Did you identify and disperse runoff to adjacent pervious areas? If so, how? If not, why?

Yes, runoff from streets will drain to landscape bioswales and detention tanks labeled on Post Construction BMP Plans.

Section C: Delineate Drainage Management Areas (DMAs)

Table C.1 DMA Classifications

DMA Name or ID	Surface Type(s)[1]	Area (Sq. Ft.)	DMA Type
Linebacker 2-1 D	Concrete or Asphalt	37,427	Type D
Linebacker 2-1 A	Ornamental Landscaping	5,494	Type A
Linebacker 2-1 B	Ornamental Landscaping	9,769	Type B
Linebacker 2-2 D	Concrete or Asphalt	42,626	Type D
Linebacker 2-2 A	Ornamental Landscaping	5,841	Type A
Linebacker 2-2 B	Ornamental Landscaping	10,390	Type B
Bunker Hill 2-3 D	Concrete or Asphalt	73,739	Type D
Bunker Hill 2-3 A	Ornamental Landscaping	10,973	Type A
Bunker Hill 2-3 B	Ornamental Landscaping	19,701	Type B
Bunker Hill 2-4 D	Concrete or Asphalt	76,631	Type D
Bunker Hill 2-4 A	Ornamental Landscaping	11,439	Type A
Bunker Hill 2-4 B	Ornamental Landscaping	20,589	Type B
Airman 2-5 D	Concrete or Asphalt	40,605	Type D
Airman 2-5 A	Ornamental Landscaping	5,697	Type A
Airman 2-5 B	Ornamental Landscaping	10,119	Type B
Airman 2-6 D	Concrete or Asphalt	45,544	Type D
Airman 2-6 A	Ornamental Landscaping	6,538	Type A
Airman 2-6 B	Ornamental Landscaping	11,851	Type B
Cactus 2-7 D	Concrete or Asphalt	32,198	Type D
Cactus 2-7 A	Ornamental Landscaping	4,828	Type A
Cactus 2-7 B	Ornamental Landscaping	8,665	Type B
Cactus 2-8 D	Concrete or Asphalt	32,208	Type D
Cactus 2-8 A	Ornamental Landscaping	4,828	Type A
Cactus 2-8 B	Ornamental Landscaping	8,663	Type B
Cactus 2-9 D	Concrete or Asphalt	40,287	Type D
Cactus 2-9 A	Ornamental Landscaping	6,099	Type A
Cactus 2-9 B	Ornamental Landscaping	10,953	Type B
Cactus 2-10 D	Concrete or Asphalt	40,274	Type D
Cactus 2-10 A	Ornamental Landscaping	6,075	Type A
Cactus 2-10 B	Ornamental Landscaping	10,908	Type B
Cactus 2-11 D	Concrete or Asphalt	11,368	Type D
Cactus 2-11 A	Ornamental Landscaping	1,585	Type A
Cactus 2-11 B	Ornamental Landscaping	2,770	Type B
Barton 2-12 D	Concrete or Asphalt	47,342	Type D
Barton 2-12 A	Ornamental Landscaping	8,033	Type A
Barton 2-12 B	Ornamental Landscaping	14,431	Type B
Barton 2-13 D	Concrete or Asphalt	45,549	Type D
Barton 2-13 A	Ornamental Landscaping	8,037	Type A
Barton 2-13 B	Ornamental Landscaping	14,616	Type B
Arclight 3-1.1 D	Concrete or Asphalt	26,283	Type D
Arclight 3-1.1 A	Ornamental Landscaping	3,772	Type A

Arclight 3-1.1 B	Ornamental Landscaping	6,863	Type B
Airman 3-1.2 D	Concrete or Asphalt	49,183	Type D
Airman 3-1.2 A	Ornamental Landscaping	6,265	Type A
Airman 3-1.2 B	Ornamental Landscaping	11,221	Type B
Airman 3-2 D	Concrete or Asphalt	68,401	Type D
Airman 3-2 A	Ornamental Landscaping	8,860	Type A
Airman 3-2 B	Ornamental Landscaping	16,101	Type B
Arclight 5-1 D	Concrete or Asphalt	43,809	Type D
Arclight 5-1 A	Ornamental Landscaping	6,638	Type A
Arclight 5-1 B	Ornamental Landscaping	11,948	Type B
Arclight 5-2 D	Concrete or Asphalt	43,809	Type D
Arclight 5-2 A	Ornamental Landscaping	6,638	Type A
Arclight 5-2 B	Ornamental Landscaping	11,948	Type B
Linebacker 7-1 D	Concrete or Asphalt	58,780	Type D
Linebacker 7-1 A	Ornamental Landscaping	7,513	Type A
Linebacker 7-1 B	Ornamental Landscaping	12,776	Type B
Linebacker 7-2 D	Concrete or Asphalt	50,083	Type D
Linebacker 7-2 A	Ornamental Landscaping	6,869	Type A
Linebacker 7-2 B	Ornamental Landscaping	11,014	Type B
Cactus 9-1 D	Concrete or Asphalt	49,635	Type D
Cactus 9-1 A	Ornamental Landscaping	5,660	Type A
Cactus 9-1 B	Ornamental Landscaping	10,172	Type B
Cactus 9-2 D	Concrete or Asphalt	51,705	Type D
Cactus 9-2 A	Ornamental Landscaping	5,120	Type A
Cactus 9-2 B	Ornamental Landscaping	9,795	Type B
Cactus 9-3 D	Concrete or Asphalt	64,804	Type D
Cactus 9-3 A	Ornamental Landscaping	7,322	Type A
Cactus 9-3 B	Ornamental Landscaping	13,142	Type B
Cactus 9-4 D	Concrete or Asphalt	65,467	Type D
Cactus 9-4 A	Ornamental Landscaping	7,482	Type A
Cactus 9-4 B	Ornamental Landscaping	13,488	Type B
Cactus 9-5 D	Concrete or Asphalt	53,700	Type D
Cactus 9-5 A	Ornamental Landscaping	5,738	Type A
Cactus 9-5 B	Ornamental Landscaping	10,238	Type B
Cactus 9-6 D	Concrete or Asphalt	55,360	Type D
Cactus 9-6 A	Ornamental Landscaping	6,321	Type A
Cactus 9-6 B	Ornamental Landscaping	11,391	Type B
Brown 9-7 D	Concrete or Asphalt	24,228	Type D
Brown 9-7 A	Ornamental Landscaping	3,066	Type A
Brown 9-7 B	Ornamental Landscaping	5,433	Type B
Brown 9-8 D	Concrete or Asphalt	18,915	Type D
Brown 9-8 A	Ornamental Landscaping	2,773	Type A
Brown 9-8 B	Ornamental Landscaping	4,971	Type B
Brown 9-9 D	Concrete or Asphalt	11,685	Type D
Brown 9-9 A	Ornamental Landscaping	1,717	Type A
Brown 9-9 B	Ornamental Landscaping	3,090	Type B
Brown 9-10 D	Concrete or Asphalt	11,699	Type D
Brown 9-10 A	Ornamental Landscaping	1,726	Type A

Brown 9-10 B	Ornamental Landscaping	3,095	Type B
Barton 16-1 D	Concrete or Asphalt	30,030	Type D
Barton 16-1 A	Ornamental Landscaping	3,597	Type A
Barton 16-1 B	Ornamental Landscaping	4,113	Type B
Barton 16-2 D	Concrete or Asphalt	57,761	Type D
Barton 16-2 A	Ornamental Landscaping	10,640	Type A
Barton 16-2 B	Ornamental Landscaping	17,052	Type B
Barton 16-3 D	Concrete or Asphalt	56,667	Type D
Barton 16-3 A	Ornamental Landscaping	10,825	Type A
Barton 16-3 B	Ornamental Landscaping	17,604	Type B
Lot 1 – L1	*Rough Graded (Future Construction)*	516,393	Type D
Lot 2 – L2	*Rough Graded (Future Construction)*	489,123	Type D
Lot 3 – L3	*Rough Graded (Future Construction)*	428,328	Type D
Lot 4-1 – L4-1	*Rough Graded (Future Construction)*	169,620	Type D
Lot 4-2 – L4-2	*Rough Graded (Future Construction)*	400,376	Type D
Lot 5 – L5	*Rough Graded (Future Construction)*	1,181,863	Type D
Lot 6 – L6	*Rough Graded (Future Construction)*	89,030	Type D
Lot 7 – L7	*Rough Graded (Future Construction)*	397,636	Type D
Lot 8 – L8	*Rough Graded (Future Construction)*	57,913	Type D
Lot 9 – L9	*Rough Graded (Future Construction)*	231,567	Type D
Lot 10 – L10	*Rough Graded (Future Construction)*	481,330	Type D
Lot 11 – L11	*Rough Graded (Future Construction)*	487,649	Type D
Lot 12 (Park) – L12	*Rough Graded (Future Construction)*	2,134,071	Type D
Lot 13 – L13	*Rough Graded (Future Construction)*	464,170	Type D
Lot 14-1 – L14-1	*Rough Graded (Future Construction)*	214,441	Type D
Lot 14-2 – L14-2	*Rough Graded (Future Construction)*	226,750	Type D
Lot 15-1 – L15-1	*Rough Graded (Future Construction)*	315,145	Type D
Lot 15-2 – L15-2	*Rough Graded (Future Construction)*	333,479	Type D
Lot 15-3 – L15-3	*Rough Graded (Future Construction)*	474,167	Type D
Lot 16-1 – L16-1	*Rough Graded (Future Construction)*	1,000,314	Type D
Lot 16-2 – L16-2	*Rough Graded (Future Construction)*	1,389,726	Type D
Lot 17 – L17	*Rough Graded (Future Construction)*	2,533,730	Type D

Table C.2 Type 'A', Self-Treating Areas

DMA Name or ID	Area (Sq. Ft.)	Stabilization Type	Irrigation Type (if any)
2-1 **A**	5,494	Landscaping	
2-2 A	5,841	Landscaping	
2-3 A	10,973	Landscaping	
2-4 A	11,439	Landscaping	
2-5 A	5,697	Landscaping	
2-6 A	6,538	Landscaping	
2-7 A	4,828	Landscaping	
2-8 A	4,828	Landscaping	
2-9 A	6,099	Landscaping	
2-10 A	6,075	Landscaping	
2-11 A	1,585	Landscaping	
2-12 A	8,033	Landscaping	

2-13 A	8,037	Landscaping	
3-1.1 A	3,772	Landscaping	
3-1.2 A	6,265	Landscaping	
3-2 A	8,860	Landscaping	
5-1 A	6,638	Landscaping	
5-2 A	6,638	Landscaping	
7-1 A	7,513	Landscaping	
7-2 A	6,869	Landscaping	
9-1 A	5,660	Landscaping	
9-2 A	5,120	Landscaping	
9-3 A	7,322	Landscaping	
9-4 A	7,482	Landscaping	
9-5 A	5,738	Landscaping	
9-6 A	6,321	Landscaping	
9-7 A	3,066	Landscaping	
9-8 A	2,773	Landscaping	
9-9 A	1,717	Landscaping	
9-10 A	1,726	Landscaping	
16-1 A	3,597	Landscaping	
16-2 A	10,640	Landscaping	
16-3 A	10,825	Landscaping	

Table C.3 Type 'B', Self-Retaining Areas

Self-Retaining Area				**Type 'C' DMAs that are draining to the Self-Retaining Area**		
DMA Name/ ID	Post-project surface type	Area (square feet) [A]	Storm Depth (inches) [B]	DMA Name / ID	[C] from Table C.4 = [C]	Required Retention Depth (inches) [D]
2-1 B	Landscaping	9,799	0.60			
2-2 B	Landscaping	10,390	0.60			
2-3 B	Landscaping	19,701	0.60			
2-4 B	Landscaping	20,589	0.60			
2-5 B	Landscaping	10,119	0.60			
2-6 B	Landscaping	11,851	0.60			
2-7 B	Landscaping	8,665	0.60			
2-8 B	Landscaping	8,663	0.60			
2-9 B	Landscaping	10,953	0.60			
2-10 B	Landscaping	10,908	0.60			
2-11 B	Landscaping	2,770	0.60			
2-12 B	Landscaping	14,431	0.60			

2-13 B	Landscaping	14,616	0.60			
3-1.1 B	Landscaping	6,863	0.60			
3-1.2 B	Landscaping	11,221	0.60			
3-2 B	Landscaping	16,101	0.60			
5-1 B	Landscaping	11,948	0.60			
5-2 B	Landscaping	11,948	0.60			
7-1 B	Landscaping	12,776	0.60			
7-2 B	Landscaping	11,014	0.60			
9-1 B	Landscaping	10,172	0.60			
9-2 B	Landscaping	9,795	0.60			
9-3 B	Landscaping	13,142	0.60			
9-4 B	Landscaping	13,488	0.60			
9-5 B	Landscaping	10,238	0.60			
9-6 B	Landscaping	11,391	0.60			
9-7 B	Landscaping	5,433	0.60			
9-8 B	Landscaping	4,971	0.60			
9-9 B	Landscaping	3,090	0.60			
9-10 B	Landscaping	3,095	0.60			
16-1 B	Landscaping	4,113	0.60			
16-2 B	Landscaping	17,052	0.60			
16-3 B	Landscaping	17,604	0.60			

Table C.4 Type 'C', Areas that Drain to Self-Retaining Areas

DMA					Receiving Self-Retaining DMA		
DMA Name/ ID	Area (square feet)	Post-project surface type	Runoff factor	Product	DMA name /ID	Area (square feet)	Ratio
	[A]		[B]	[C] = [A] x [B]		[D]	[C]/[D]
N/A							

Table C.5 Type 'D', Areas Draining to BMPs

DMA Name or ID	BMP Name or ID
2-1 D	MWS No. 2-1/Model MWS-L-4-13
2-2 D	MWS No. 2-2/Model MWS-L-4-17
2-3 D	MWS No. 2-3/Model MWS-L-4-21
2-4 D	MWS No. 2-4/Model MWS-L-4-21
2-5 D	MWS No. 2-5/Model MWS-L-4-15
2-6 D	MWS No. 2-6/Model MWS-L-4-17
2-7 D	MWS No. 2-7/Model MWS-L-4-13
2-8 D	MWS No. 2-8/Model MWS-L-4-13
2-9 D	MWS No. 2-9/Model MWS-L-4-15
2-10 D	MWS No. 2-10/Model MWS-L-4-15
2-11 D	MWS No. 2-11/Model MWS-L-4-6
2-12 D	MWS No. 2-12/Model MWS-L-4-17
2-13 D	MWS No. 2-13/Model MWS-L-4-17
3-1.1 D	MWS No. 3-1.1/Model MWS-L-4-13
3-1.2 D	MWS No. 3-1.2/Model MWS-L-4-17
3-2 D	MWS No. 3-2/Model MWS-L-4-21
5-1 D	MWS No. 5-1/Model MWS-L-4-15
5-2 D	MWS No. 5-2/Model MWS-L-4-15
7-1 D	MWS No. 7-1/Model MWS-L-4-19
7-2 D	MWS No. 7-2/Model MWS-L-4-17
9-1 D	MWS No. 9-1/Model MWS-L-4-17
9-2 D	MWS No. 9-2/Model MWS-L-4-17
9-3 D	MWS No. 9-3/Model MWS-L-4-19
9-4 D	MWS No. 9-4/Model MWS-L-4-21
9-5 D	MWS No. 9-5/Model MWS-L-4-17
9-6 D	MWS No. 9-6/Model MWS-L-4-17
9-7 D	MWS No. 9-7/Model MWS-L-4-13
9-8 D	MWS No. 9-8/Model MWS-L-4-8
9-9 D	MWS No. 9-9/Model MWS-L-4-4
9-10 D	MWS No. 9-10/Model MWS-L-4-4
16-1 D	MWS No. 16-1/Model MWS-L-4-13
16-2 D	MWS No. 16-2/Model MWS-L-4-17
16-3 D	MWS No. 16-3/Model MWS-L-4-17
Lot 1 – L1	Proposed Sedimentation Basin
Lot 2 – L2	Proposed Sedimentation Basin
Lot 3 – L3	Proposed Sedimentation Basin
Lot 4-1 – L4-1	Proposed Sedimentation Basin
Lot 4-2 – L4-2	Proposed Sedimentation Basin
Lot 5 – L5	Proposed Sedimentation Basin
Lot 6 – L6	Proposed Sedimentation Basin
Lot 7 – L7	Proposed Sedimentation Basin
Lot 8 – L8	Proposed Sedimentation Basin
Lot 9 – L9	Proposed Sedimentation Basin
Lot 10 – L10	Proposed Sedimentation Basin
Lot 11 – L11	Proposed Sedimentation Basin
Lot 12 (Park) – L12	Proposed Sedimentation Basin

Lot 13 – L13	Proposed Sedimentation Basin
Lot 14-1 – L14-1	Proposed Sedimentation Basin
Lot 14-2 – L14-2	Proposed Sedimentation Basin
Lot 15-1 – L15-1	Proposed Sedimentation Basin
Lot 15-2 – L15-2	Proposed Sedimentation Basin
Lot 15-3 – L15-3	Proposed Sedimentation Basin
Lot 16-1 – L16-1	Proposed Sedimentation Basin
Lot 16-2 – L16-2	Proposed Sedimentation Basin
Lot 17 – L17	Proposed Sedimentation Basin

Note: Lots *will not be developed during the current phase of the project. In the future, each Lot will require a WQMP to be developed, and will follow the 2012 WQMP Template and Guidance document. Lots should follow the LID hierarchy (Infiltration, Harvest and Reuse, bioretention and biotreatment) when selecting the final LID for the development. Runoff from proposed roadways constructed during Phase III will be treated via bioswales (bioretention).*

Rough-graded Lots will be graded to drain towards proposed desilting/sedimentation basins in the interim condition. The development of Lots should follow the LID hierarchy and will presumably feature detention systems that drain down to proprietary biotreatment devices for land featuring large amounts of impervious area. Perimeter slopes would be self-treating while landscape areas onsite should feature self-retaining areas that help limit runoff. The remaining DMA's must pass through the LID BMP hierarchy before alternative compliance measures may be considered.

Section D: Implement LID BMPs

D.1 Infiltration Applicability

Is there an approved downstream 'Highest and Best Use' for stormwater runoff (see discussion in Chapter 2.4.4 of the WQMP Guidance Document for further details)? ☐ Y ☒ N

If yes has been checked, Infiltration BMPs shall not be used for the site. If no, continue working through this section to implement your LID BMPs. It is recommended that you contact your Co-Permittee to verify whether or not your project discharges to an approved downstream 'Highest and Best Use' feature.

Geotechnical Report

A Geotechnical Report or Phase I Environmental Site Assessment may be required by the Copermittee to confirm present and past site characteristics that may affect the use of Infiltration BMPs. In addition, the Co-Permittee, at their discretion, may not require a geotechnical report for small projects as described in Chapter 2 of the WQMP Guidance Document. If a geotechnical report has been prepared, include it in Appendix 3. In addition, if a Phase I Environmental Site Assessment has been prepared, include it in Appendix 4.

Is this project classified as a small project consistent with the requirements of Chapter 2 of the WQMP Guidance Document? ☐ Y ☒ N

Infiltration Feasibility

Table D.1 below is meant to provide a simple means of assessing which DMAs on your site support Infiltration BMPs and is discussed in the WQMP Guidance Document in Chapter 2.4.5. Check the appropriate box for each question and then list affected DMAs as applicable. If additional space is needed, add a row below the corresponding answer.

Table D.1 Infiltration Feasibility

Does the project site…	YES	NO
…have any DMAs with a seasonal high groundwater mark shallower than 10 feet?		X
If Yes, list affected DMAs:		
…have any DMAs located within 100 feet of a water supply well?		X
If Yes, list affected DMAs:		
…have any areas identified by the geotechnical report as posing a public safety risk where infiltration of stormwater could have a negative impact?		X
If Yes, list affected DMAs:		
…have measured in-situ infiltration rates of less than 1.6 inches / hour?	X	
If Yes, list affected DMAs:		
…have significant cut and/or fill conditions that would preclude in-situ testing of infiltration rates at the final infiltration surface?		X
If Yes, list affected DMAs:		
…geotechnical report identify other site-specific factors that would preclude effective and safe infiltration?	X	
Describe here: The site has shallow bedrock which does not allow infiltration.		

If you answered "Yes" to any of the questions above for any DMA, Infiltration BMPs should not be used for those DMAs and you should proceed to the assessment for Harvest and Use below.

D.2 Harvest and Use Assessment

Please check what applies*:*

☒ Reclaimed water will be used for the non-potable water demands for the project.

- *Reclaimed water lines are proposed along Barton Drive, Airman Drive, Linebacker Drive, Arclight Drive, Cactus Avenue, and Bunker Hill Drive*

☐ Downstream water rights may be impacted by Harvest and Use as approved by the Regional Board (verify with the Copermittee).

☐ The Design Capture Volume will be addressed using Infiltration Only BMPs. In such a case, Harvest and Use BMPs are still encouraged, but it would not be required if the Design Capture Volume will be infiltrated or evapotranspired.

If any of the above boxes have been checked, Harvest and Use BMPs need not be assessed for the site. If neither of the above criteria applies, follow the steps below to assess the feasibility of irrigation use, toilet use and other non-potable uses (e.g., industrial use).

Irrigation Use Feasibility

Complete the following steps to determine the feasibility of harvesting stormwater runoff for Irrigation Use BMPs on your site:

Step 1: Identify the total area of irrigated landscape on the site, and the type of landscaping used.

Total Area of Irrigated Landscape: N/A

Type of Landscaping (Conservation Design or Active Turf): N/A

Step 2: Identify the planned total of all impervious areas on the proposed project from which runoff might be feasibly captured and stored for irrigation use. Depending on the configuration of buildings and other impervious areas on the site, you may consider the site as a whole, or parts of the site, to evaluate reasonable scenarios for capturing and storing runoff and directing the stored runoff to the potential use(s) identified in Step 1 above.

Total Area of Impervious Surfaces: N/A

Step 3: Cross reference the Design Storm depth for the project site (see Exhibit A of the WQMP Guidance Document) with the left column of Table 2-3 in Chapter 2 to determine the minimum area of Effective Irrigated Area per Tributary Impervious Area (EIATIA).

Enter your EIATIA factor: N/A

Step 4: Multiply the unit value obtained from Step 3 by the total of impervious areas from Step 2 to develop the minimum irrigated area that would be required.

Minimum required irrigated area: N/A

Step 5: Determine if harvesting stormwater runoff for irrigation use is feasible for the project by comparing the total area of irrigated landscape (Step 1) to the minimum required irrigated area (Step 4).

Minimum required irrigated area (Step 4)	Available Irrigated Landscape (Step 1)
N/A	N/A

Toilet Use Feasibility

Complete the following steps to determine the feasibility of harvesting stormwater runoff for toilet flushing uses on your site:

Step 1: Identify the projected total number of daily toilet users during the wet season, and account for any periodic shut downs or other lapses in occupancy:

Projected Number of Daily Toilet Users: N/A

Project Type: N/A

Step 2: Identify the planned total of all impervious areas on the proposed project from which runoff might be feasibly captured and stored for toilet use. Depending on the configuration of buildings and other impervious areas on the site, you may consider the site as a whole, or parts of the site, to evaluate reasonable scenarios for capturing and storing runoff and directing the stored runoff to the potential use(s) identified in Step 1 above.

Total Area of Impervious Surfaces: N/A

Step 3: Enter the Design Storm depth for the project site (see Exhibit A) into the left column of Table 2-1 in Chapter 2 to determine the minimum number or toilet users per tributary impervious acre (TUTIA).

Enter your TUTIA factor: N/A

Step 4: Multiply the unit value obtained from Step 3 by the total of impervious areas from Step 2 to develop the minimum number of toilet users that would be required.

Minimum number of toilet users: N/A

Step 5: Determine if harvesting stormwater runoff for toilet flushing use is feasible for the project by comparing the Number of Daily Toilet Users (Step 1) to the minimum required number of toilet users (Step 4).

Minimum required Toilet Users (Step 4)	**Projected number of toilet users (Step 1)**
N/A	N/A

Other Non-Potable Use Feasibility

Are there other non-potable uses for stormwater runoff on the site (e.g., industrial use)? See Chapter 2 of the Guidance for further information. If yes, describe below. If no, write N/A.

N/A

Step 1: Identify the projected average daily non-potable demand, in gallons per day, during the wet season and accounting for any periodic shut downs or other lapses in occupancy or operation.

Average Daily Demand: N/A

Step 2: Identify the planned total of all impervious areas on the proposed project from which runoff might be feasibly captured and stored for the identified non-potable use. Depending on the configuration of buildings and other impervious areas on the site, you may consider the site as a whole, or parts of the site, to evaluate reasonable scenarios for capturing and storing runoff and directing the stored runoff to the potential use(s) identified in Step 1 above.

Total Area of Impervious Surfaces: N/A

Step 3: Enter the Design Storm depth for the project site (see Exhibit A) into the left column of Table 2-3 in Chapter 2 to determine the minimum demand for non-potable uses per tributary impervious acre.

Enter the factor from Table 2-3: N/A

Step 4: Multiply the unit value obtained from Step 4 by the total of impervious areas from Step 3 to develop the minimum number of gallons per day of non-potable use that would be required.

Minimum required use: N/A

Step 5: Determine if harvesting stormwater runoff for other non-potable use is feasible for the project by comparing the Number of Daily Toilet Users (Step 1) to the minimum required number of toilet users (Step 4).

Minimum required non-potable use (Step 4)	**Projected average daily use (Step 1)**
N/A	N/A

If Irrigation, Toilet and Other Use feasibility anticipated demands are less than the applicable minimum values, Harvest and Use BMPs are not required and you should proceed to utilize LID Bioretention and Biotreatment, unless a site-specific analysis has been completed that demonstrates technical infeasibility as noted in D.3 below.

D.3 Bioretention and Biotreatment Assessment

Other LID Bioretention and Biotreatment BMPs as described in Chapter 2.4.7 of the WQMP Guidance Document are feasible on nearly all development sites with sufficient advance planning.

Select one of the following:

☒ LID Bioretention/Biotreatment BMPs will be used for some or all DMAs of the project as noted below in Section D.4 (note the requirements of Section 3.4.2 in the WQMP Guidance Document).

☐ A site-specific analysis demonstrating the technical infeasibility of all LID BMPs has been performed and is included in Appendix 5. If you plan to submit an analysis demonstrating the technical infeasibility of LID BMPs, request a pre-submittal meeting with the Copermittee to discuss this option. Proceed to Section E to document your alternative compliance measures.

☐ None of the above.

D.4 Feasibility Assessment Summaries

From the Infiltration, Harvest and Use, Bioretention and Biotreatment Sections above, complete Table D.2 below to summarize which LID BMPs are technically feasible, and which are not, based upon the established hierarchy.

Table D.2 LID Prioritization Summary Matrix

DMA Name/ID	LID BMP Hierarchy				No LID (Alternative Compliance)
	1. Infiltration	2. Harvest and use	3. Bioretention	4. Biotreatment	
2-1 D	☐	☐	☐	☒	☐
2-2 D	☐	☐	☐	☒	☐
2-3 D	☐	☐	☐	☒	☐
2-4 D	☐	☐	☐	☒	☐
2-5 D	☐	☐	☐	☒	☐
2-6 D	☐	☐	☐	☒	☐
2-7 D	☐	☐	☐	☒	☐
2-8 D	☐	☐	☐	☒	☐
2-9 D	☐	☐	☐	☒	☐
2-10 D	☐	☐	☐	☒	☐
2-11 D	☐	☐	☐	☒	☐
2-12 D	☐	☐	☐	☒	☐
2-13 D	☐	☐	☐	☒	☐
3-1.1 D	☐	☐	☐	☒	☐
3-1.2 D	☐	☐	☐	☒	☐
3-2 D	☐	☐	☐	☒	☐
5-1 D	☐	☐	☐	☒	☐
5-2 D	☐	☐	☐	☒	☐
7-1 D	☐	☐	☐	☒	☐
7-2 D	☐	☐	☐	☒	☐
9-1 D	☐	☐	☐	☒	☐
9-2 D	☐	☐	☐	☒	☐
9-3 D	☐	☐	☐	☒	☐
9-4 D	☐	☐	☐	☒	☐
9-5 D	☐	☐	☐	☒	☐
9-6 D	☐	☐	☐	☒	☐
9-7 D	☐	☐	☐	☒	☐
9-8 D	☐	☐	☐	☒	☐
9-9 D	☐	☐	☐	☒	☐
9-10 D	☐	☐	☐	☒	☐
16-1 D	☐	☐	☐	☒	☐
16-2 D	☐	☐	☐	☒	☐
16-3 D	☐	☐	☐	☒	☐
Lot 1 – L1	☐	☐	☐	☒	☐
Lot 2 – L2	☐	☐	☐	☒	☐
Lot 3 – L3	☐	☐	☐	☒	☐
Lot 4-1 – L4-1	☐	☐	☐	☒	☐
Lot 4-2 – L4-2	☐	☐	☐	☒	☐
Lot 5 – L5	☐	☐	☐	☒	☐

Lot 6 – L6	☐	☐	☐	☒	☐
Lot 7 – L7	☐	☐	☐	☒	☐
Lot 8 – L8	☐	☐	☐	☒	☐
Lot 9 – L9	☐	☐	☐	☒	☐
Lot 10 – L10	☐	☐	☐	☒	☐
Lot 11 – L11	☐	☐	☐	☒	☐
Lot 12 (Park) – L12	☐	☐	☐	☒	☐
Lot 13 – L13	☐	☐	☐	☒	☐
Lot 14-1 – L14-1	☐	☐	☐	☒	☐
Lot 14-2 – L14-2	☐	☐	☐	☒	☐
Lot 15-1 – L15-1	☐	☐	☐	☒	☐
Lot 15-2 – L15-2	☐	☐	☐	☒	☐
Lot 15-3 – L15-3	☐	☐	☐	☒	☐
Lot 16-1 – L16-1	☐	☐	☐	☒	☐
Lot 16-2 – L16-2	☐	☐	☐	☒	☐
Lot 17 – L17	☐	☐	☐	☒	☐

NOTE: Runoff from proposed roadways constructed during the Upper Plateau Project (Barton Drive, Arclight Drive, Cactus Avenue, Bunker Hill Drive, Airman Drive, Linebacker Drive and Brown Avenue) will be routed to detention tanks located within the landscape easements adjacent to the right of way. Reversed curb outlets located at the curb flow line will allow storm runoff to enter into the proposed earthen swale within the landscape easement that contains 12” atrium grates connected to each detention tank. The detention tanks are sized to hold the design capture volume, 2 year-24-hour storm volume, and the 100-year storm volumes. An estimated conservative volume of 6,000 cubic-feet/acre was used to meet this criterion. All detention tanks will include 2” drain lines leading to a 6”-12” storm drain line leading to the proposed Modular Wetland biotreatment units. The Modular Wetland units are sized to treat the total volume and drawdown the tanks within 48 hours. The Modular Wetland units are shown on the WQMP site plan included in Appendix 1. Sizing and design calculations are shown in Appendix 6.

Lots will not be developed during the current phase of the project. Lots will be graded to drain towards the desilting basins in the interim condition. In the future, each Lot will require a separate WQMP to be developed and will follow criteria set forth in the 2012 WQMP Template and Guidance document. As individual Lots are developed, addendum WQMPs will be submitted. All addendum WQMPs will need to meet the requirements and approved approach of the final approved Master WQMP. Lots should follow the LID hierarchy (Infiltration, Harvest and Reuse, Bioretention, and Biotreatment) when selecting the final LID for the development; infiltration can be excluded as a form of LID due to the poor infiltration rates due to shallow bedrock encountered at the Project Site.

As lots are developed, there may be DMAs where LID BMPs are not feasible. If LID is not feasible, provide a brief narrative below summarizing why they are not feasible, include your technical infeasibility criteria in Appendix 5, and proceed to Section E below to document Alternative Compliance measures for those DMAs. Recall that each proposed DMA must pass through the LID BMP hierarchy before alternative compliance measures may be considered.

D.5 LID BMP Sizing

Each LID BMP must be designed to ensure that the Design Capture Volume will be addressed by the selected BMPs. First, calculate the Design Capture Volume for each LID BMP using the V_{BMP} worksheet in Appendix F of the LID BMP Design Handbook. Second, design the LID BMP to meet the required V_{BMP} using a method approved by the Co-permittee. Utilize the worksheets found in the LID BMP Design Handbook or consult with your Co-permittee to assist you in correctly sizing your LID BMPs. Complete Table D.3 below to document the Design Capture Volume and the Proposed Volume for each LID BMP. Provide the completed design procedure sheets for each LID BMP in Appendix 6. You may add additional rows to the table below as needed.

Table D.3 DCV Calculations for LID BMPs

DMA Type/ID	DMA Area (square feet)	Post-Project Surface Type	Effective Impervious Fraction, I_f	DMA Runoff Factor	DMA Areas x Runoff Factor	*Linebacker 2-1D Detention System/MWS (48-hour drawdown)*		
	[A]		[B]	[C]	[A] x [C]			
2-1D	37,427	Concrete or Asphalt	1.0	0.89	33,385	*Design Storm Depth (in)*	*Design Capture Volume, V_{BMP} (cubic feet)*	*Proposed Treated Volume on Plans (cf)*
	A_T = Σ[A] =37,427				Σ= [D] =33,385	[E] = 0.60	$[F] = \frac{[D]x[E]}{12}$ = 1,669.2	[G] = 6,261

DMA Type/ID	DMA Area (square feet)	Post-Project Surface Type	Effective Impervious Fraction, I_f	DMA Runoff Factor	DMA Areas x Runoff Factor	*Linebacker 2-2D Detention System/MWS (48-hour drawdown)*		
	[A]		[B]	[C]	[A] x [C]			
2-2D	42,626	Concrete or Asphalt	1.0	0.89	38,022	*Design Storm Depth (in)*	*Design Capture Volume, V_{BMP} (cubic feet)*	*Proposed Treated Volume on Plans (cf)*
	A_T = Σ[A] =42,626				Σ= [D] =38,022	[E] = 0.60	$[F] = \frac{[D]x[E]}{12}$ = 1,901.1	[G] = 8,984

DMA Type/ID	DMA Area (square feet)	Post-Project Surface Type	Effective Impervious Fraction, I_f	DMA Runoff Factor	DMA Areas x Runoff Factor	*Bunker Hill 2-3D Detention System/MWS (48-hour drawdown)*		
	[A]		[B]	[C]	[A] x [C]			
2-3D	73,739	Concrete or Asphalt	1.0	0.89	65,775	*Design Storm Depth (in)*	*Design Capture Volume,* $\mathbf{V_{BMP}}$ *(cubic feet)*	*Proposed Treated Volume on Plans (cf)*
	A_T = Σ[A] =73,739				Σ= [D] =65,775	[E] = 0.60	$[F] = \frac{[D]x[E]}{12}$ = 3,288.8	[G] = 11,706

DMA Type/ID	DMA Area (square feet)	Post-Project Surface Type	Effective Impervious Fraction, I_f	DMA Runoff Factor	DMA Areas x Runoff Factor	*Bunker Hill 2-4D Detention System/MWS (48-hour drawdown)*		
	[A]		[B]	[C]	[A] x [C]			
2-4D	76,631	Concrete or Asphalt	1.0	0.89	68,355	*Design Storm Depth (in)*	*Design Capture Volume,* $\mathbf{V_{BMP}}$ *(cubic feet)*	*Proposed Treated Volume on Plans (cf)*
	A_T = Σ[A] =76,631				Σ= [D] =68,355	[E] = 0.60	$[F] = \frac{[D]x[E]}{12}$ = 3,417.7	[G] = 11,706

DMA Type/ID	DMA Area (square feet)	Post-Project Surface Type	Effective Impervious Fraction, I_f	DMA Runoff Factor	DMA Areas x Runoff Factor	*Airman 2-5D Detention System/MWS (48-hour drawdown)*		
	[A]		[B]	[C]	[A] x [C]			
2-5D	40,605	Concrete or Asphalt	1.0	0.89	36,220	*Design Storm Depth (in)*	*Design Capture Volume,* $\mathbf{V_{BMP}}$ *(cubic feet)*	*Proposed Treated Volume on Plans (cf)*
	A_T = Σ[A] =40,605				Σ= [D] =36,220	[E] = 0.60	$[F] = \frac{[D]x[E]}{12}$ = 1,811.0	[G] = 7,623

DMA Type/ID	DMA Area (square feet)	Post-Project Surface Type	Effective Impervious Fraction, I_f	DMA Runoff Factor	DMA Areas x Runoff Factor	*Airman 2-6D Detention System/MWS (48-hour drawdown)*		
	[A]		[B]	[C]	[A] x [C]			
2-6D	45,544	Concrete or Asphalt	1.0	0.89	40,625	*Design Storm Depth (in)*	*Design Capture Volume,* $\mathbf{V_{BMP}}$ *(cubic feet)*	*Proposed Treated Volume on Plans (cf)*
	A_T = Σ[A] =45,544				Σ= [D] =40,625	[E] = 0.60	$[F] = \frac{[D]x[E]}{12}$ = 2,031.3	[G] = 8,984

DMA Type/ID	DMA Area (square feet)	Post-Project Surface Type	Effective Impervious Fraction, I_f	DMA Runoff Factor	DMA Areas x Runoff Factor	*Cactus 2-7D Detention System/MWS (48-hour drawdown)*		
	[A]		[B]	[C]	[A] x [C]			
2-7D	32,198	Concrete or Asphalt	1.0	0.89	28,721	*Design Storm Depth (in)*	*Design Capture Volume,* $\mathbf{V_{BMP}}$ *(cubic feet)*	*Proposed Treated Volume on Plans (cf)*
	A_T = Σ[A] =32,198				Σ= [D] =28,721	[E] = 0.60	$[F] = \frac{[D]x[E]}{12}$ = 1,436.0	[G] = 6,261

DMA Type/ID	DMA Area (square feet)	Post-Project Surface Type	Effective Impervious Fraction, I_f	DMA Runoff Factor	DMA Areas x Runoff Factor	*Cactus 2-8D Detention System/MWS (48-hour drawdown)*		
	[A]		[B]	[C]	[A] x [C]			
2-8D	32,208	Concrete or Asphalt	1.0	0.89	28,730	*Design Storm Depth (in)*	*Design Capture Volume,* $\mathbf{V_{BMP}}$ *(cubic feet)*	*Proposed Treated Volume on Plans (cf)*
	A_T = Σ[A] =32,208				Σ= [D] =28,730	[E] = 0.60	$[F] = \frac{[D]x[E]}{12}$ = 1,436.5	[G] = 6,261

DMA Type/ID	DMA Area (square feet)	Post-Project Surface Type	Effective Impervious Fraction, I_f	DMA Runoff Factor	DMA Areas x Runoff Factor	Cactus 2-9D Detention System/MWS (48-hour drawdown)		
	[A]		[B]	[C]	[A] x [C]			
2-9D	40,287	Concrete or Asphalt	1.0	0.89	35,936	*Design Storm Depth (in)*	*Design Capture Volume,* $\mathbf{V_{BMP}}$ *(cubic feet)*	*Proposed Treated Volume on Plans (cf)*
	A_T = Σ[A] =40,287				Σ= [D] =35,936	[E] = 0.60	$[F] = \frac{[D]x[E]}{12}$ = 1,796.8	[G] =7,623

DMA Type/ID	DMA Area (square feet)	Post-Project Surface Type	Effective Impervious Fraction, I_f	DMA Runoff Factor	DMA Areas x Runoff Factor	Cactus 2-10D Detention System/MWS (48-hour drawdown)		
	[A]		[B]	[C]	[A] x [C]			
2-10D	40,274	Concrete or Asphalt	1.0	0.89	35,924	*Design Storm Depth (in)*	*Design Capture Volume,* $\mathbf{V_{BMP}}$ *(cubic feet)*	*Proposed Treated Volume on Plans (cf)*
	A_T = Σ[A] =40,274				Σ= [D] =35,924	[E] = 0.60	$[F] = \frac{[D]x[E]}{12}$ = 1,796.2	[G] = 7,623

DMA Type/ID	DMA Area (square feet)	Post-Project Surface Type	Effective Impervious Fraction, I_f	DMA Runoff Factor	DMA Areas x Runoff Factor	Cactus 2-11D Detention System/MWS (48-hour drawdown)		
	[A]		[B]	[C]	[A] x [C]			
2-11D	11,368	Concrete or Asphalt	1.0	0.89	10,140	*Design Storm Depth (in)*	*Design Capture Volume,* $\mathbf{V_{BMP}}$ *(cubic feet)*	*Proposed Treated Volume on Plans (cf)*
	A_T = Σ[A] =11,368				Σ= [D] =10,140	[E] = 0.60	$[F] = \frac{[D]x[E]}{12}$ = 507.0	[G] =3,200

DMA Type/ID	DMA Area (square feet)	Post-Project Surface Type	Effective Impervious Fraction, I_f	DMA Runoff Factor	DMA Areas x Runoff Factor	Barton 2-12D Detention System/MWS (48-hour drawdown)		
	[A]		[B]	[C]	[A] x [C]			
2-12D	47,342	Concrete or Asphalt	1.0	0.89	42,229	*Design Storm Depth (in)*	*Design Capture Volume,* $\mathbf{V_{BMP}}$ *(cubic feet)*	*Proposed Treated Volume on Plans (cf)*
	A_T = Σ[A] =47,342				Σ= [D] =42,229	[E] = 0.60	$[F] = \frac{[D]x[E]}{12}$ = 2,111.5	[G] =8,984

DMA Type/ID	DMA Area (square feet)	Post-Project Surface Type	Effective Impervious Fraction, I_f	DMA Runoff Factor	DMA Areas x Runoff Factor	Barton 2-13D Detention System/MWS (48-hour drawdown)		
	[A]		[B]	[C]	[A] x [C]			
2-13D	45,549	Concrete or Asphalt	1.0	0.89	40,630	*Design Storm Depth (in)*	*Design Capture Volume,* $\mathbf{V_{BMP}}$ *(cubic feet)*	*Proposed Treated Volume on Plans (cf)*
	A_T = Σ[A] =45,549				Σ= [D] =40,630	[E] = 0.60	$[F] = \frac{[D]x[E]}{12}$ = 2,031.5	[G] = 8,984

DMA Type/ID	DMA Area (square feet)	Post-Project Surface Type	Effective Impervious Fraction, I_f	DMA Runoff Factor	DMA Areas x Runoff Factor	Arclight 3-1.1D Detention System/MWS (48-hour drawdown)		
	[A]		[B]	[C]	[A] x [C]			
3-1.1D	26,283	Concrete or Asphalt	1.0	0.89	23,444	*Design Storm Depth (in)*	*Design Capture Volume,* $\mathbf{V_{BMP}}$ *(cubic feet)*	*Proposed Treated Volume on Plans (cf)*
	A_T = Σ[A] =26,283				Σ= [D] =23,444	[E] = 0.60	$[F] = \frac{[D]x[E]}{12}$ = 1,172.2	[G] = 6,261

DMA Type/ID	DMA Area (square feet)	Post-Project Surface Type	Effective Impervious Fraction, I_f	DMA Runoff Factor	DMA Areas x Runoff Factor	*Airman 3-1.2D Detention System/MWS (48-hour drawdown)*		
	[A]		[B]	[C]	[A] x [C]			
3-1.2D	49,183	Concrete or Asphalt	1.0	0.89	43,871	*Design Storm Depth (in)*	*Design Capture Volume,* $\mathbf{V_{BMP}}$ *(cubic feet)*	*Proposed Treated Volume on Plans (cf)*
	A_T = Σ[A] =49,183				Σ= [D] =43,871	[E] = 0.60	$[F] = \frac{[D]x[E]}{12}$ = 2,193.6	[G] = 8,984

DMA Type/ID	DMA Area (square feet)	Post-Project Surface Type	Effective Impervious Fraction, I_f	DMA Runoff Factor	DMA Areas x Runoff Factor	*Airman 3-2D Detention System/MWS (48-hour drawdown)*		
	[A]		[B]	[C]	[A] x [C]			
3-2D	68,401	Concrete or Asphalt	1.0	0.89	61,014	*Design Storm Depth (in)*	*Design Capture Volume,* $\mathbf{V_{BMP}}$ *(cubic feet)*	*Proposed Treated Volume on Plans (cf)*
	A_T = Σ[A] =68,401				Σ= [D] =61,014	[E] = 0.60	$[F] = \frac{[D]x[E]}{12}$ = 3,050.7	[G] = 11,706

DMA Type/ID	DMA Area (square feet)	Post-Project Surface Type	Effective Impervious Fraction, I_f	DMA Runoff Factor	DMA Areas x Runoff Factor	*Arclight 5-1D Detention System/MWS (48-hour drawdown)*		
	[A]		[B]	[C]	[A] x [C]			
5-1D	43,809	Concrete or Asphalt	1.0	0.89	39,078	*Design Storm Depth (in)*	*Design Capture Volume,* $\mathbf{V_{BMP}}$ *(cubic feet)*	*Proposed Treated Volume on Plans (cf)*
	A_T = Σ[A] =43,809				Σ= [D] =39,078	[E] = 0.60	$[F] = \frac{[D]x[E]}{12}$ = 1,953.9	[G] = 7,623

DMA Type/ID	DMA Area (square feet)	Post-Project Surface Type	Effective Impervious Fraction, I_f	DMA Runoff Factor	DMA Areas x Runoff Factor	*Arclight 5-2D Detention System/MWS (48-hour drawdown)*		
	[A]		[B]	[C]	[A] x [C]			
5-2D	43,809	Concrete or Asphalt	1.0	0.89	39,078	*Design Storm Depth (in)*	*Design Capture Volume,* V_{BMP} *(cubic feet)*	*Proposed Treated Volume on Plans (cf)*
	A_T = Σ[A] =43,809				Σ= [D] =39,078	[E] = 0.60	$[F] = \frac{[D]x[E]}{12}$ = 1,953.9	[G] = 7,623

DMA Type/ID	DMA Area (square feet)	Post-Project Surface Type	Effective Impervious Fraction, I_f	DMA Runoff Factor	DMA Areas x Runoff Factor	*Linebacker 7-1D Detention System/MWS (48-hour drawdown)*		
	[A]		[B]	[C]	[A] x [C]			
7-1D	58,780	Concrete or Asphalt	1.0	0.89	52,432	*Design Storm Depth (in)*	*Design Capture Volume,* V_{BMP} *(cubic feet)*	*Proposed Treated Volume on Plans (cf)*
	A_T = Σ[A] =58,780				Σ= [D] =52,432	[E] = 0.60	$[F] = \frac{[D]x[E]}{12}$ = 2,621.6	[G] = 10,345

DMA Type/ID	DMA Area (square feet)	Post-Project Surface Type	Effective Impervious Fraction, I_f	DMA Runoff Factor	DMA Areas x Runoff Factor	*Linebacker 7-2D Detention System/MWS (48-hour drawdown)*		
	[A]		[B]	[C]	[A] x [C]			
7-2D	50,083	Concrete or Asphalt	1.0	0.89	44,674	*Design Storm Depth (in)*	*Design Capture Volume,* V_{BMP} *(cubic feet)*	*Proposed Treated Volume on Plans (cf)*
	A_T = Σ[A] =50,083				Σ= [D] =44,674	[E] = 0.60	$[F] = \frac{[D]x[E]}{12}$ = 2,233.7	[G] = 8,984

DMA Type/ID	DMA Area (square feet)	Post-Project Surface Type	Effective Impervious Fraction, I_f	DMA Runoff Factor	DMA Areas x Runoff Factor	Cactus 9-1D Detention System/MWS (48-hour drawdown)		
	[A]		[B]	[C]	[A] x [C]			
9-1D	49,635	Concrete or Asphalt	1.0	0.89	44,274	*Design Storm Depth (in)*	*Design Capture Volume,* V_{BMP} *(cubic feet)*	*Proposed Treated Volume on Plans (cf)*
	A_T = Σ[A] =49,635				Σ= [D] =44,274	[E] = 0.60	$[F] = \frac{[D]x[E]}{12}$ = 2,213.7	[G] = 8,984

DMA Type/ID	DMA Area (square feet)	Post-Project Surface Type	Effective Impervious Fraction, I_f	DMA Runoff Factor	DMA Areas x Runoff Factor	Cactus 9-2D Detention System/MWS (48-hour drawdown)		
	[A]		[B]	[C]	[A] x [C]			
9-2D	51,705	Concrete or Asphalt	1.0	0.89	46,121	*Design Storm Depth (in)*	*Design Capture Volume,* V_{BMP} *(cubic feet)*	*Proposed Treated Volume on Plans (cf)*
	A_T = Σ[A] =51,705				Σ= [D] =46,121	[E] = 0.60	$[F] = \frac{[D]x[E]}{12}$ = 2,306.0	[G] = 8,984

DMA Type/ID	DMA Area (square feet)	Post-Project Surface Type	Effective Impervious Fraction, I_f	DMA Runoff Factor	DMA Areas x Runoff Factor	Cactus 9-3D Detention System/MWS (48-hour drawdown)		
	[A]		[B]	[C]	[A] x [C]			
9-3D	64,804	Concrete or Asphalt	1.0	0.89	57,805	*Design Storm Depth (in)*	*Design Capture Volume,* V_{BMP} *(cubic feet)*	*Proposed Treated Volume on Plans (cf)*
	A_T = Σ[A] =64,804				Σ= [D] =57,805	[E] = 0.60	$[F] = \frac{[D]x[E]}{12}$ = 2,890.3	[G] = 10,345

DMA Type/ID	DMA Area (square feet)	Post-Project Surface Type	Effective Impervious Fraction, I_f	DMA Runoff Factor	DMA Areas x Runoff Factor	Cactus 9-4D Detention System/MWS (48-hour drawdown)		
	[A]		[B]	[C]	[A] x [C]			
9-4D	65,467	Concrete or Asphalt	1.0	0.89	58,397	*Design Storm Depth (in)*	*Design Capture Volume,* V_{BMP} *(cubic feet)*	*Proposed Treated Volume on Plans (cf)*
	A_T = Σ[A] =65,467				Σ= [D] =58,397	[E] = 0.60	$[F] = \frac{[D]x[E]}{12}$ = 2,919.8	[G] = 11,706

DMA Type/ID	DMA Area (square feet)	Post-Project Surface Type	Effective Impervious Fraction, I_f	DMA Runoff Factor	DMA Areas x Runoff Factor	Cactus 9-5D Detention System/MWS (48-hour drawdown)		
	[A]		[B]	[C]	[A] x [C]			
9-5D	53,700	Concrete or Asphalt	1.0	0.89	47,900	*Design Storm Depth (in)*	*Design Capture Volume,* V_{BMP} *(cubic feet)*	*Proposed Treated Volume on Plans (cf)*
	A_T = Σ[A] =53,700				Σ= [D] =47,900	[E] = 0.60	$[F] = \frac{[D]x[E]}{12}$ = 2,395.0	[G] = 8,984

DMA Type/ID	DMA Area (square feet)	Post-Project Surface Type	Effective Impervious Fraction, I_f	DMA Runoff Factor	DMA Areas x Runoff Factor	Cactus 9-6D Detention System/MWS (48-hour drawdown)		
	[A]		[B]	[C]	[A] x [C]			
9-6D	55,360	Concrete or Asphalt	1.0	0.89	49,381	*Design Storm Depth (in)*	*Design Capture Volume,* V_{BMP} *(cubic feet)*	*Proposed Treated Volume on Plans (cf)*
	A_T = Σ[A] =55,360				Σ= [D] =49,381	[E] = 0.60	$[F] = \frac{[D]x[E]}{12}$ = 2,469.1	[G] = 8,984

DMA Type/ID	DMA Area (square feet)	Post-Project Surface Type	Effective Impervious Fraction, I_f	DMA Runoff Factor	DMA Areas x Runoff Factor	Brown 9-7D Detention System/MWS (48-hour drawdown)		
	[A]		[B]	[C]	[A] x [C]			
9-7D	24,228	Concrete or Asphalt	1.0	0.89	21,611	*Design Storm Depth (in)*	*Design Capture Volume,* V_{BMP} *(cubic feet)*	*Proposed Treated Volume on Plans (cf)*
	A_T = Σ[A] =24,228				Σ= [D] =21,611	[E] = 0.60	$[F] = \frac{[D]x[E]}{12}$ = 1,080.6	[G] = 5,036

DMA Type/ID	DMA Area (square feet)	Post-Project Surface Type	Effective Impervious Fraction, I_f	DMA Runoff Factor	DMA Areas x Runoff Factor	Brown 9-8D Detention System/MWS (48-hour drawdown)		
	[A]		[B]	[C]	[A] x [C]			
9-8D	18,915	Concrete or Asphalt	1.0	0.89	16,872	*Design Storm Depth (in)*	*Design Capture Volume,* V_{BMP} *(cubic feet)*	*Proposed Treated Volume on Plans (cf)*
	A_T = Σ[A] =18,915				Σ= [D] =16,872	[E] = 0.60	$[F] = \frac{[D]x[E]}{12}$ = 843.6	[G] = 5,036

DMA Type/ID	DMA Area (square feet)	Post-Project Surface Type	Effective Impervious Fraction, I_f	DMA Runoff Factor	DMA Areas x Runoff Factor	Brown 9-9D Detention System/MWS (48-hour drawdown)		
	[A]		[B]	[C]	[A] x [C]			
9-9D	11,685	Concrete or Asphalt	1.0	0.89	10,423	*Design Storm Depth (in)*	*Design Capture Volume,* V_{BMP} *(cubic feet)*	*Proposed Treated Volume on Plans (cf)*
	A_T = Σ[A] =11,685				Σ= [D] =10,423	[E] = 0.60	$[F] = \frac{[D]x[E]}{12}$ = 1,389.7	[G] = 2,280

DMA Type/ID	DMA Area (square feet)	Post-Project Surface Type	Effective Impervious Fraction, I_f	DMA Runoff Factor	DMA Areas x Runoff Factor	***Brown 9-10D Detention System/MWS (48-hour drawdown)***		
	[A]		[B]	[C]	[A] x [C]			
9-10D	11,699	Concrete or Asphalt	1.0	0.89	10,436	*Design Storm Depth (in)*	*Design Capture Volume,* $\mathbf{V_{BMP}}$ *(cubic feet)*	*Proposed Treated Volume on Plans (cf)*
	A_T = Σ[A] =11,699				Σ= [D] =10,436	[E] = 0.60	$[F] = \frac{[D]x[E]}{12}$ = 2,261.0	[G] = 2,280

DMA Type/ID	DMA Area (square feet)	Post-Project Surface Type	Effective Impervious Fraction, I_f	DMA Runoff Factor	DMA Areas x Runoff Factor	***Barton 16-1D Detention System/MWS (48-hour drawdown)***		
	[A]		[B]	[C]	[A] x [C]			
16-1D	30,030	Concrete or Asphalt	1.0	0.89	26,787	*Design Storm Depth (in)*	*Design Capture Volume,* $\mathbf{V_{BMP}}$ *(cubic feet)*	*Proposed Treated Volume on Plans (cf)*
	A_T = Σ[A] =30,030				Σ= [D] =26,787	[E] = 0.60	$[F] = \frac{[D]x[E]}{12}$ = 1,339.3	[G] = 6,261

DMA Type/ID	DMA Area (square feet)	Post-Project Surface Type	Effective Impervious Fraction, I_f	DMA Runoff Factor	DMA Areas x Runoff Factor	***Barton 16-2D Detention System/MWS (48-hour drawdown)***		
	[A]		[B]	[C]	[A] x [C]			
16-2D	57,761	Concrete or Asphalt	1.0	0.89	51,523	*Design Storm Depth (in)*	*Design Capture Volume,* $\mathbf{V_{BMP}}$ *(cubic feet)*	*Proposed Treated Volume on Plans (cf)*
	A_T = Σ[A] =57,761				Σ= [D] =51,523	[E] = 0.60	$[F] = \frac{[D]x[E]}{12}$ = 2,576.1	[G] = 8,984

DMA Type/ID	DMA Area (square feet)	Post-Project Surface Type	Effective Impervious Fraction, I_f	DMA Runoff Factor	DMA Areas x Runoff Factor	Barton 16-3D Detention System/MWS (48-hour drawdown)		
	[A]		[B]	[C]	[A] x [C]			
16-3D	56,667	Concrete or Asphalt	1.0	0.89	50,547	*Design Storm Depth (in)*	*Design Capture Volume, V_{BMP} (cubic feet)*	*Proposed Treated Volume on Plans (cf)*
	A_T = Σ[A] =56,667				Σ= [D] =50,547	[E] = 0.60	$[F] = \frac{[D]x[E]}{12}$ = 2,527.3	[G] = 8,984

The following are estimates for the LID BMP sizing for each of the future Lots. The design was assumed to include an onsite detention system that drains into a treatment device. However, as individual Lots are developed, addendum WQMPs will need to be submitted that meet the requirements and approved approach of the final approved Master WQMP. Lots should follow the LID hierarchy (Infiltration, Harvest and Reuse, Bioretention, and Biotreatment) when selecting the final LID design for the development; infiltration can be excluded as a form of LID due to the poor infiltration rates due to shallow bedrock encountered at the Project Site.

DMA Type/ID	DMA Area (square feet)	Post-Project Surface Type	Effective Impervious Fraction, I_f	DMA Runoff Factor	DMA Areas x Runoff Factor	Lot 1 Future Construction (Estimated 80% Impervious)		
	[A]		[B]	[C]	[A] x [C]			
	413,114	Concrete or Asphalt	1.0	0.89	368,498	*Design Storm Depth (in)*	*Design Capture Volume, V_{BMP} (cubic feet)*	*Proposed Treated Volume on Plans (cf)*
	103,279	Ornamental Landscaping	0.1	0.11	11,408			
	A_T = Σ[A] =516,393				Σ= [D] =379,906	[E] = 0.60	$[F] = \frac{[D]x[E]}{12}$ = 18,995.3	

DMA Type/ID	DMA Area (square feet)	Post-Project Surface Type	Effective Impervious Fraction, I_f	DMA Runoff Factor	DMA Areas x Runoff Factor	Lot 2 Future Construction (Estimated 80% Impervious)		
	[A]		[B]	[C]	[A] x [C]			
	391,298	Concrete or Asphalt	1.0	0.89	349,038	*Design Storm Depth (in)*	*Design Capture Volume, V_{BMP} (cubic feet)*	*Proposed Treated Volume on Plans (cf)*
	97,825	Ornamental Landscaping	0.1	0.11	1,0806			
	A_T = Σ[A] =489,123				Σ= [D] =359,844	[E] = 0.60	$[F] = \frac{[D]x[E]}{12}$ = 17,992.2	

DMA Type/ID	DMA Area (square feet)	Post-Project Surface Type	Effective Impervious Fraction, I_f	DMA Runoff Factor	DMA Areas x Runoff Factor	Lot 3 Future Construction (Estimated 80% Impervious)		
	[A]		[B]	[C]	[A] x [C]			
	342,662	Concrete or Asphalt	1.0	0.89	305,655	*Design Storm Depth (in)*	*Design Capture Volume,* V_{BMP} *(cubic feet)*	*Proposed Treated Volume on Plans (cf)*
	85,666	Ornamental Landscaping	0.1	0.11	9,462			
	A_T = Σ[A] =428,328				Σ= [D] =315,117	[E] = 0.60	$[F] = \frac{[D]x[E]}{12}$ = 15,755.9	

DMA Type/ID	DMA Area (square feet)	Post-Project Surface Type	Effective Impervious Fraction, I_f	DMA Runoff Factor	DMA Areas x Runoff Factor	Lot 4-1 Future Construction (Estimated 80% Impervious)		
	[A]		[B]	[C]	[A] x [C]			
	135,696	Concrete or Asphalt	1.0	0.89	121,041	*Design Storm Depth (in)*	*Design Capture Volume,* V_{BMP} *(cubic feet)*	*Proposed Treated Volume on Plans (cf)*
	33,924	Ornamental Landscaping	0.1	0.11	3,747			
	A_T = Σ[A] =169,620				Σ= [D] =124,788	[E] = 0.60	$[F] = \frac{[D]x[E]}{12}$ = 6,239.4	

DMA Type/ID	DMA Area (square feet)	Post-Project Surface Type	Effective Impervious Fraction, I_f	DMA Runoff Factor	DMA Areas x Runoff Factor	Lot 4-2 Future Construction (Estimated 80% Impervious)		
	[A]		[B]	[C]	[A] x [C]			
	320,301	Concrete or Asphalt	1.0	0.89	285,708	*Design Storm Depth (in)*	*Design Capture Volume,* V_{BMP} *(cubic feet)*	*Proposed Treated Volume on Plans (cf)*
	80,075	Ornamental Landscaping	0.1	0.11	8,845			
	A_T = Σ[A] =400,376				Σ= [D] =294,553	[E] = 0.60	$[F] = \frac{[D]x[E]}{12}$ = 14,727.7	

DMA Type/ID	DMA Area (square feet)	Post-Project Surface Type	Effective Impervious Fraction, I_f	DMA Runoff Factor	DMA Areas x Runoff Factor	Lot 5 Future Construction (Estimated 80% Impervious)		
	[A]		[B]	[C]	[A] x [C]			
	945,490	Concrete or Asphalt	1.0	0.89	843,377	*Design Storm Depth (in)*	*Design Capture Volume,* V_{BMP} *(cubic feet)*	*Proposed Treated Volume on Plans (cf)*
	236,373	Ornamental Landscaping	0.1	0.11	26,109			
	A_T = Σ[A] =1,181,863				Σ= [D] =869,487	[E] = 0.60	$[F] = \frac{[D]x[E]}{12}$ = 869,487	

DMA Type/ID	DMA Area (square feet)	Post-Project Surface Type	Effective Impervious Fraction, I_f	DMA Runoff Factor	DMA Areas x Runoff Factor	Lot 6 Future Construction (Estimated 80% Impervious)		
	[A]		[B]	[C]	[A] x [C]			
	71,224	Concrete or Asphalt	1.0	0.89	63,532	*Design Storm Depth (in)*	*Design Capture Volume,* V_{BMP} *(cubic feet)*	*Proposed Treated Volume on Plans (cf)*
	17,806	Ornamental Landscaping	0.1	0.11	1,967			
	A_T = Σ[A] =89,030				Σ= [D] =65,499	[E] = 0.60	$[F] = \frac{[D]x[E]}{12}$ = 3,274.9	

DMA Type/ID	DMA Area (square feet)	Post-Project Surface Type	Effective Impervious Fraction, I_f	DMA Runoff Factor	DMA Areas x Runoff Factor	Lot 7 Future Construction (Estimated 80% Impervious)		
	[A]		[B]	[C]	[A] x [C]			
	318,109	Concrete or Asphalt	1.0	0.89	283,753	*Design Storm Depth (in)*	*Design Capture Volume,* V_{BMP} *(cubic feet)*	*Proposed Treated Volume on Plans (cf)*
	79,527	Ornamental Landscaping	0.1	0.11	8,784			
	A_T = Σ[A] =397,636				Σ= [D] =292,537	[E] = 0.60	$[F] = \frac{[D]x[E]}{12}$ = 14,626.9	

DMA Type/ID	DMA Area (square feet)	Post-Project Surface Type	Effective Impervious Fraction, I_f	DMA Runoff Factor	DMA Areas x Runoff Factor	Lot 8 Future Construction (Estimated 80% Impervious)		
	[A]		[B]	[C]	[A] x [C]			
	46,330	Concrete or Asphalt	1.0	0.89	41,327	*Design Storm Depth (in)*	*Design Capture Volume,* V_{BMP} *(cubic feet)*	*Proposed Treated Volume on Plans (cf)*
	11,583	Ornamental Landscaping	0.1	0.11	1,279			
	A_T = Σ[A] =57,913				Σ= [D] =42,606	[E] = 0.60	$[F] = \frac{[D]x[E]}{12}$ = 2,130.3	

DMA Type/ID	DMA Area (square feet)	Post-Project Surface Type	Effective Impervious Fraction, I_f	DMA Runoff Factor	DMA Areas x Runoff Factor	Lot 9 Future Construction (Estimated 80% Impervious)		
	[A]		[B]	[C]	[A] x [C]			
	185,254	Concrete or Asphalt	1.0	0.89	165,246	*Design Storm Depth (in)*	*Design Capture Volume,* V_{BMP} *(cubic feet)*	*Proposed Treated Volume on Plans (cf)*
	46,313	Ornamental Landscaping	0.1	0.11	5,116			
	A_T = Σ[A] =231,567				Σ= [D] =170,362	[E] = 0.60	$[F] = \frac{[D]x[E]}{12}$ = 8,518.1	

DMA Type/ID	DMA Area (square feet)	Post-Project Surface Type	Effective Impervious Fraction, I_f	DMA Runoff Factor	DMA Areas x Runoff Factor	Lot 10 Future Construction (Estimated 80% Impervious)		
	[A]		[B]	[C]	[A] x [C]			
	385,064	Concrete or Asphalt	1.0	0.89	343,477	*Design Storm Depth (in)*	*Design Capture Volume,* V_{BMP} *(cubic feet)*	*Proposed Treated Volume on Plans (cf)*
	96,266	Ornamental Landscaping	0.1	0.11	10,633			
	A_T = Σ[A] =481,330				Σ= [D] =354,110	[E] = 0.60	$[F] = \frac{[D]x[E]}{12}$ = 17,705.5	

DMA Type/ID	DMA Area (square feet)	Post-Project Surface Type	Effective Impervious Fraction, I_f	DMA Runoff Factor	DMA Areas x Runoff Factor	Lot 11 Future Construction (Estimated 80% Impervious)		
	[A]		[B]	[C]	[A] x [C]			
	390,119	Concrete or Asphalt	1.0	0.89	347,986	*Design Storm Depth (in)*	*Design Capture Volume,* V_{BMP} *(cubic feet)*	*Proposed Treated Volume on Plans (cf)*
	97,530	Ornamental Landscaping	0.1	0.11	10,773			
	A_T = Σ[A] =487,649				Σ= [D] =358,759	[E] = 0.60	$[F] = \frac{[D]x[E]}{12}$ = 17,938.0	

DMA Type/ID	DMA Area (square feet)	Post-Project Surface Type	Effective Impervious Fraction, I_f	DMA Runoff Factor	DMA Areas x Runoff Factor	Lot 12 (Park) Future Construction (Estimated 10% Impervious)		
	[A]		[B]	[C]	[A] x [C]			
	213,407	Concrete or Asphalt	1.0	0.89	190,359	*Design Storm Depth (in)*	*Design Capture Volume,* V_{BMP} *(cubic feet)*	*Proposed Treated Volume on Plans (cf)*
	1,920,664	Ornamental Landscaping	0.1	0.11	212,153			
	A_T = Σ[A] =2,134,071				Σ= [D] =402,512	[E] = 0.60	$[F] = \frac{[D]x[E]}{12}$ = 20,125.6	

DMA Type/ID	DMA Area (square feet)	Post-Project Surface Type	Effective Impervious Fraction, I_f	DMA Runoff Factor	DMA Areas x Runoff Factor	Lot 13 Future Construction (Estimated 80% Impervious)		
	[A]		[B]	[C]	[A] x [C]			
	371,336	Concrete or Asphalt	1.0	0.89	331,232	*Design Storm Depth (in)*	*Design Capture Volume,* V_{BMP} *(cubic feet)*	*Proposed Treated Volume on Plans (cf)*
	92,834	Ornamental Landscaping	0.1	0.11	10,254			
	A_T = Σ[A] =464,170				Σ= [D] =341,486	[E] = 0.60	$[F] = \frac{[D]x[E]}{12}$ = 17,074.3	

DMA Type/ID	DMA Area (square feet)	Post-Project Surface Type	Effective Impervious Fraction, I_f	DMA Runoff Factor	DMA Areas x Runoff Factor	Lot 14-1 Future Construction (Estimated 80% Impervious)		
	[A]		[B]	[C]	[A] x [C]			
	171,553	Concrete or Asphalt	1.0	0.89	153,025	*Design Storm Depth (in)*	*Design Capture Volume,* V_{BMP} *(cubic feet)*	*Proposed Treated Volume on Plans (cf)*
	42,888	Ornamental Landscaping	0.1	0.11	4,737			
	A_T = Σ[A] =214,441				Σ= [D] =157,762	[E] = 0.60	$[F] = \frac{[D]x[E]}{12}$ = 7,888.1	

DMA Type/ID	DMA Area (square feet)	Post-Project Surface Type	Effective Impervious Fraction, I_f	DMA Runoff Factor	DMA Areas x Runoff Factor	Lot 14-2 Future Construction (Estimated 80% Impervious)		
	[A]		[B]	[C]	[A] x [C]			
	181,400	Concrete or Asphalt	1.0	0.89	161,809	*Design Storm Depth (in)*	*Design Capture Volume,* V_{BMP} *(cubic feet)*	*Proposed Treated Volume on Plans (cf)*
	45,350	Ornamental Landscaping	0.1	0.11	5,009			
	A_T = Σ[A] =226,750				Σ= [D] =166,818	[E] = 0.60	$[F] = \frac{[D]x[E]}{12}$ = 8,340.9	

DMA Type/ID	DMA Area (square feet)	Post-Project Surface Type	Effective Impervious Fraction, I_f	DMA Runoff Factor	DMA Areas x Runoff Factor	Lot 15-1 Future Construction (Estimated 80% Impervious)		
	[A]		[B]	[C]	[A] x [C]			
	252,116	Concrete or Asphalt	1.0	0.89	224,887	*Design Storm Depth (in)*	*Design Capture Volume,* V_{BMP} *(cubic feet)*	*Proposed Treated Volume on Plans (cf)*
	63,029	Ornamental Landscaping	0.1	0.11	6,962			
	A_T = Σ[A] =315,145				Σ= [D] =231,850	[E] = 0.60	$[F] = \frac{[D]x[E]}{12}$ = 11,592.5	

DMA Type/ID	DMA Area (square feet)	Post-Project Surface Type	Effective Impervious Fraction, I_f	DMA Runoff Factor	DMA Areas x Runoff Factor	Lot 15-2 Future Construction (Estimated 80% Impervious)		
	[A]		[B]	[C]	[A] x [C]			
	266,783	Concrete or Asphalt	1.0	0.89	237,971	*Design Storm Depth (in)*	*Design Capture Volume,* V_{BMP} *(cubic feet)*	*Proposed Treated Volume on Plans (cf)*
	66,696	Ornamental Landscaping	0.1	0.11	7,367			
	A_T = Σ[A] =333,479				Σ= [D] =245,338	[E] = 0.60	$[F] = \frac{[D]x[E]}{12}$ = 12,266.9	

DMA Type/ID	DMA Area (square feet)	Post-Project Surface Type	Effective Impervious Fraction, I_f	DMA Runoff Factor	DMA Areas x Runoff Factor	Lot 15-3 Future Construction (Estimated 80% Impervious)		
	[A]		[B]	[C]	[A] x [C]			
	379,334	Concrete or Asphalt	1.0	0.89	338,366	*Design Storm Depth (in)*	*Design Capture Volume,* V_{BMP} *(cubic feet)*	*Proposed Treated Volume on Plans (cf)*
	94,833	Ornamental Landscaping	0.1	0.11	10,475			
	A_T = Σ[A] =474,167				Σ= [D] =348,841	[E] = 0.60	$[F] = \frac{[D]x[E]}{12}$ = 17,442.0	

DMA Type/ID	DMA Area (square feet)	Post-Project Surface Type	Effective Impervious Fraction, I_f	DMA Runoff Factor	DMA Areas x Runoff Factor	Lot 16-1 Future Construction (Estimated 80% Impervious)		
	[A]		[B]	[C]	[A] x [C]			
	800,251	Concrete or Asphalt	1.0	0.89	713,824	*Design Storm Depth (in)*	*Design Capture Volume,* V_{BMP} *(cubic feet)*	*Proposed Treated Volume on Plans (cf)*
	200,063	Ornamental Landscaping	0.1	0.11	22,099			
	A_T = Σ[A] =1,000,14				Σ= [D] =735,923	[E] = 0.60	$[F] = \frac{[D]x[E]}{12}$ = 36,796.1	

DMA Type/ID	DMA Area (square feet)	Post-Project Surface Type	Effective Impervious Fraction, I_f	DMA Runoff Factor	DMA Areas x Runoff Factor	*Lot 16-2 Future Construction (Estimated 80% Impervious)*		
	[A]		[B]	[C]	[A] x [C]			
	1,111,781	Concrete or Asphalt	1.0	0.89	991,708	*Design Storm Depth (in)*	*Design Capture Volume,* V_{BMP} *(cubic feet)*	*Proposed Treated Volume on Plans (cf)*
	277,945	Ornamental Landscaping	0.1	0.11	30,701			
	A_T = Σ[A] =1,389,726				Σ= [D] =1,022,410	[E] = 0.60	$[F] = \frac{[D]x[E]}{12}$ = 51,120.5	

DMA Type/ID	DMA Area (square feet)	Post-Project Surface Type	Effective Impervious Fraction, I_f	DMA Runoff Factor	DMA Areas x Runoff Factor	*Lot 17 Future Construction (Estimated 80% Impervious)*		
	[A]		[B]	[C]	[A] x [C]			
	2,026,984	Concrete or Asphalt	1.0	0.89	1,808,070	*Design Storm Depth (in)*	*Design Capture Volume,* V_{BMP} *(cubic feet)*	*Proposed Treated Volume on Plans (cf)*
	506,746	Ornamental Landscaping	0.1	0.11	55,974			
	A_T = Σ[A] =2,533,730				Σ= [D] =1,864,044	[E] = 0.60	$[F] = \frac{[D]x[E]}{12}$ = 93,202.2	

Section E: Alternative Compliance (LID Waiver Program)

LID BMPs are expected to be feasible on virtually all projects. Where LID BMPs have been demonstrated to be infeasible as documented in Section D, other Treatment Control BMPs must be used (subject to LID waiver approval by the Copermittee). Check one of the following boxes:

☒ LID Principles and LID BMPs have been incorporated into the site design to fully address all Drainage Management Areas. No alternative compliance measures are required for this project and thus this Section is not required to be completed.

- *Or* -

☐ The following Drainage Management Areas are unable to be addressed using LID BMPs. A site-specific analysis demonstrating technical infeasibility of LID BMPs has been approved by the Co-Permittee and included in Appendix 5. Additionally, no downstream regional and/or sub-regional LID BMPs exist or are available for use by the project. The following alternative compliance measures on the following pages are being implemented to ensure that any pollutant loads expected to be discharged by not incorporating LID BMPs, are fully mitigated.

All runoff from the DMA's are being treated by LID BMPs. Roadways are being treated by proprietary biofiltration units (Modular Wetlands); lots are being treated by sediment/desilting basins for the interim conditions. As the Lots are developed, the basins will be replaced by a permanent BMP as defined in the project specific WQMP for the Lot and addendum to this Master WQMP.

E.1 Identify Pollutants of Concern

Utilizing Table A.1 from Section A above which noted your project's receiving waters and their associated EPA approved 303(d) listed impairments, cross reference this information with that of your selected Priority Development Project Category in Table E.1 below. If the identified General Pollutant Categories are the same as those listed for your receiving waters, then these will be your Pollutants of Concern and the appropriate box or boxes will be checked on the last row. The purpose of this is to document compliance and to help you appropriately plan for mitigating your Pollutants of Concern in lieu of implementing LID BMPs.

Table E.1 Potential Pollutants by Land Use Type

Priority Development Project Categories and/or Project Features (check those that apply)	General Pollutant Categories							
	Bacterial Indicators	Metals	Nutrients	Pesticides	Toxic Organic Compounds	Sediments	Trash & Debris	Oil & Grease
☐ Detached Residential Development	P	N	P	P	N	P	P	P
☐ Attached Residential Development	P	N	P	P	N	P	P	P (2)
☒ Commercial/Industrial Development	P (3)	P	P (1)	P (1)	P (5)	P (1)	P	P
☐ Automotive Repair Shops	N	P	N	N	P (4, 5)	N	P	P
☐ Restaurants (>5,000 ft^2)	P	N	N	N	N	N	P	P
☐ Hillside Development (>5,000 ft^2)	P	N	P	P	N	P	P	P
☐ Parking Lots (>5,000 ft^2)	P (6)	P	P (1)	P (1)	P (4)	P (1)	P	P
☐ Retail Gasoline Outlets	N	P	N	N	P	N	P	P
Project Priority Pollutant(s) of Concern	☒	☐	☒	☐	☒	☒	☐	☐

P = Potential

N = Not Potential

(1) A potential Pollutant if non-native landscaping exists or is proposed onsite; otherwise not expected

(2) A potential Pollutant if the project includes uncovered parking areas; otherwise not expected

(3) A potential Pollutant is land use involving animal waste

(4) Specifically petroleum hydrocarbons

(5) Specifically solvents

(6) Bacterial indicators are routinely detected in pavement runoff

E.2 Stormwater Credits

Projects that cannot implement LID BMPs but nevertheless implement smart growth principles are potentially eligible for Stormwater Credits. Utilize Table 3-8 within the WQMP Guidance Document to identify your Project Category and its associated Water Quality Credit. If not applicable, write N/A.

Table E.2 Water Quality Credits

Qualifying Project Categories	Credit Percentage[2]
N/A	
Total Credit Percentage[1]	

[1]*Cannot Exceed 50%*
[2]*Obtain corresponding data from Table 3-8 in the WQMP Guidance Document*

E.3 Sizing Criteria

After you appropriately considered Stormwater Credits for your project, utilize Table E.3 below to appropriately size them to the DCV, or Design Flow Rate, as applicable. Please reference Chapter 3.5.2 of the WQMP Guidance Document for further information.

Table E.3 Treatment Control BMP Sizing

DMA Type/ID	**DMA Area (square feet)**	**Post-Project Surface Type**	**Effective Impervious Fraction, I_f**	**DMA Runoff Factor**	**DMA Area x Runoff Factor**		***Enter BMP Name / Identifier Here***		
	[A]		[B]	[C]	[A] x [C]				
N/A						*Design Storm Depth (in)*	*Minimum Design Capture Volume or Design Flow Rate (cubic feet or cfs)*	*Total Storm Water Credit % Reduction*	*Proposed Volume or Flow on Plans (cubic feet or cfs)*
	A_T = Σ[A]				Σ= [D]	[E]	$[F] = \frac{[D]x[E]}{[G]}$	[F] X (1-[H])	[I]

[B], [C] is obtained as described in Section 2.3.1 from the WQMP Guidance Document
[E] is obtained from Exhibit A in the WQMP Guidance Document
[G] is for Flow-Based Treatment Control BMPs [G] = 43,560, for Volume-Based Control Treatment BMPs, [G] = 12
[H] is from the Total Credit Percentage as Calculated from Table E.2 above
[I] as obtained from a design procedure sheet from the BMP manufacturer and should be included in Appendix 6

E.4 Treatment Control BMP Selection

Treatment Control BMPs typically provide proprietary treatment mechanisms to treat potential pollutants in runoff, but do not sustain significant biological processes. Treatment Control BMPs must have a removal efficiency of a medium or high effectiveness as quantified below:

- **High**: equal to or greater than 80% removal efficiency
- **Medium**: between 40% and 80% removal efficiency

Such removal efficiency documentation (e.g., studies, reports, etc.) as further discussed in Chapter 3.5.2 of the WQMP Guidance Document, must be included in Appendix 6. In addition, ensure that proposed Treatment Control BMPs are properly identified on the WQMP Site Plan in Appendix 1.

Table E.4 Treatment Control BMP Selection

Selected Treatment Control BMP Name or ID[1]	Priority Pollutant(s) of Concern to Mitigate[2]	Removal Efficiency Percentage[3]
N/A	N/A	N/A

[1] Treatment Control BMPs must not be constructed within Receiving Waters. In addition, a proposed Treatment Control BMP may be listed more than once if they possess more than one qualifying pollutant removal efficiency.
[2] Cross Reference Table E.1 above to populate this column.
[3] As documented in a Co-Permittee Approved Study and provided in Appendix 6.

Section F: Hydromodification

F.1 Hydrologic Conditions of Concern (HCOC) Analysis

Once you have determined that the LID design is adequate to address water quality requirements, you will need to assess if the proposed LID Design may still create a HCOC. Review Chapters 2 and 3 (including Figure 3-7) of the WQMP Guidance Document to determine if your project must mitigate for Hydromodification impacts. If your project meets one of the following criteria which will be indicated by the check boxes below, you do not need to address Hydromodification at this time. However, if the project does not qualify for Exemptions 1, 2 or 3, then additional measures must be added to the design to comply with HCOC criteria. This is discussed in further detail below in Section F.2.

HCOC EXEMPTION 1: The Priority Development Project disturbs less than one acre. The Copermittee has the discretion to require a Project-Specific WQMP to address HCOCs on projects less than one acre on a case-by-case basis. The disturbed area calculation should include all disturbances associated with larger common plans of development.

Does the project qualify for this HCOC Exemption? ☐ Y ☒ N

If Yes, HCOC criteria do not apply.

HCOC EXEMPTION 2: The volume and time of concentration[1] of storm water runoff for the post-development condition is not significantly different from the pre-development condition for a 2-year return frequency storm (a difference of 5% or less is considered insignificant) using one of the following methods to calculate:

- Riverside County Hydrology Manual
- Technical Release 55 (TR-55): Urban Hydrology for Small Watersheds (NRCS 1986), or derivatives thereof, such as the Santa Barbara Urban Hydrograph Method
- Other methods acceptable to the Co-Permittee

Does the project qualify for this HCOC Exemption? ☐ Y ☒ N

If yes, report results in Table F.1 below and provide your substantiated hydrologic analysis in Appendix 7.

Table F.1 Hydrologic Conditions of Concern Summary

	2-year – 24-hour		
	Pre-condition	**Post-condition**	**% Difference**
Time of Concentration			
Volume (Cubic Feet)			

[1] Time of concentration is defined as the time after the beginning of the rainfall when all portions of the drainage basin are contributing to flow at the outlet.

HCOC EXEMPTION 3: All downstream conveyance channels to an adequate sump (for example, Prado Dam, Lake Elsinore, Canyon Lake, Santa Ana River, or other lake, reservoir or naturally erosion resistant feature) that will receive runoff from the project are engineered and regularly maintained to ensure design flow capacity; no sensitive stream habitat areas will be adversely affected; or are not identified on the Co-Permittees Hydromodification Sensitivity Maps.

Does the project qualify for this HCOC Exemption? ☐ Y ☒ N

If Yes, HCOC criteria do not apply and note below which adequate sump applies to this HCOC qualifier:

F.2 HCOC Mitigation

If none of the above HCOC Exemption Criteria are applicable, HCOC criteria is considered mitigated if they meet one of the following conditions:

a. Additional LID BMPS are implemented onsite or offsite to mitigate potential erosion or habitat impacts as a result of HCOCs. This can be conducted by an evaluation of site-specific conditions utilizing accepted professional methodologies published by entities such as the California Stormwater Quality Association (CASQA), the Southern California Coastal Water Research Project (SCCRWP), or other Co-Permittee approved methodologies for site-specific HCOC analysis.

b. The project is developed consistent with an approved Watershed Action Plan that addresses HCOC in Receiving Waters.

c. Mimicking the pre-development hydrograph with the post-development hydrograph, for a 2-year return frequency storm. Generally, the hydrologic conditions of concern are not significant, if the post-development hydrograph is no more than 10% greater than pre-development hydrograph. In cases where excess volume cannot be infiltrated or captured and reused, discharge from the site must be limited to a flow rate no greater than 110% of the pre-development 2-year peak flow.

The site is located in a non-exempt zone for hydromodification. See appendix 7 for a map documenting the area as non-exempt.

The current project phase will include detention tanks within the landscape easement adjacent to the right of ways of Barton Drive, Arclight Drive, Cactus Avenue, Bunker Hill Drive, Airman Drive, Linebacker Drive and Brown Avenue to account for the hydromodification volume and treatment for the new roadways. Sizing of the tanks was based on an estimated 6,000 CF/AC of improved area. This is a conservative value that accounts for the design capture volume, 2 year-24-hour storm volume, and the 100-year storm volumes. All detention tanks will include 2” drain lines leading to a 6”-12” storm drain line leading to the proposed Modular Wetland biotreatment units near the beginning of the streets. Sizing and design calculations are shown in Appendix 6.

As the Lots are developed, each Lot will have to design its LID BMPs for the individual Lot’s portion of the overall hydromodification volume and hydromodification calculations will be required for each Lot once it is developed. The proposed project will mitigate any Hydrologic Conditions of Concern by limiting proposed discharge flow rate from the site to less than the existing peak flow rate from the 2-year storm event.

As lots are developed, discharge from the site must be limited to a flow rate no greater than 110% of the existing 2-year peak flow of the Lot being constructed. Previous Meridian projects within the MJPA areas have also been required to hold back the 100-year storm to existing conditions. These past projects have yielded approximately 6,000 cf/acre that needed to be detained to meet the criterion of the WQMP as well as hydrology standards. Designs implemented in the past have included Geostorage underground systems utilizing stone, geosynthetics and reinforced concrete as well as systems that utilize HDPE pipe. The below table shows estimates of future detention system capacity that will likely be seen as each Lot is developed.

Lot	DMA	Area (acres)	Estimated Future Detention System Volume (cf) (Based on 6,000 cf/acre)
Lot 1	Lot 1 – L1	11.9	71,200
Lot 2	Lot 2 – L2	11.2	67,400
Lot 3	Lot 3 – L3	9.8	59,000
Lot 4	Lot 4-1 – L4-1	3.9	23,400
	Lot 4-2 – L4-2	9.2	55,200
Lot 5	Lot 5 – L5	27.1	162,800
Lot 6	Lot 6 – L6	2.0	12,300
Lot 7	Lot 7 – L7	9.1	54,800
Lot 8	Lot 8 – L8	1.3	8,000
Lot 9	Lot 9 – L9	5.3	31,900
Lot 10	Lot 10 – L10	11.0	66,300
Lot 11	Lot 11 – L11	11.2	67,200
Lot 12 (Park)	Lot 12 (Park) – L12	49.0	294,000
Lot 13	Lot 13 – L13	10.7	64,000
Lot 14	Lot 14-1 – L14-1	4.9	29,600
	Lot 14-2 – L14-2	5.2	31,300
Lot 15	Lot 15-1 – L15-1	7.2	43,500
	Lot 15-2 – L15-2	7.7	46,000
	Lot 15-3 – L15-3	10.9	65,400
Lot 16	Lot 16-1 – L16-1	23.0	137,800
	Lot 16-2 – L16-2	31.9	191,500
Lot 17	Lot 17 – L17	58.2	349,000

Section G: Source Control BMPs

Source control BMPs include permanent, structural features that may be required in your project plans — such as roofs over and berms around trash and recycling areas — and Operational BMPs, such as regular sweeping and "housekeeping", that must be implemented by the site's occupant or user. The MEP standard typically requires both types of BMPs. In general, Operational BMPs cannot be substituted for a feasible and effective permanent BMP. Using the Pollutant Sources/Source Control Checklist in Appendix 8, review the following procedure to specify Source Control BMPs for your site:

1. ***Identify Pollutant Sources*:** Review Column 1 in the Pollutant Sources/Source Control Checklist. Check off the potential sources of Pollutants that apply to your site.

2. ***Note Locations on Project-Specific WQMP Exhibit*:** Note the corresponding requirements listed in Column 2 of the Pollutant Sources/Source Control Checklist. Show the location of each Pollutant source and each permanent Source Control BMP in your Project-Specific WQMP Exhibit located in Appendix 1.

3. ***Prepare a Table and Narrative*:** Check off the corresponding requirements listed in Column 3 in the Pollutant Sources/Source Control Checklist. In the left column of Table G.1 below, list each potential source of runoff Pollutants on your site (from those that you checked in the Pollutant Sources/Source Control Checklist). In the middle column, list the corresponding permanent, Structural Source Control BMPs (from Columns 2 and 3 of the Pollutant Sources/Source Control Checklist) used to prevent Pollutants from entering runoff. **Add additional narrative** in this column that explains any special features, materials or methods of construction that will be used to implement these permanent, Structural Source Control BMPs.

4. ***Identify Operational Source Control BMPs:*** To complete your table, refer once again to the Pollutant Sources/Source Control Checklist. List in the right column of your table the Operational BMPs that should be implemented as long as the anticipated activities continue at the site. Copermittee stormwater ordinances require that applicable Source Control BMPs be implemented; the same BMPs may also be required as a condition of a use permit or other revocable Discretionary Approval for use of the site.

Table G.1 Permanent and Operational Source Control Measures

Potential Sources of Runoff pollutants	Permanent Structural Source Control BMPs	Operational Source Control BMPs
On-site storm drain inlets	Mark all inlets with the words "Only Rain Down the Storm Drain" or similar. Catch Basin Markers may be available from the Riverside County Flood Control and Water Conservation District, call 951.955.1200 to verify. **(CASQQ BMP SD-13, "Storm Drain Signage")**	Maintain and periodically repaint or replace markings. Provide stormwater pollution prevention information to new site owners, lessees, or operators. See applicable operational BMPs in Fact Sheet SC-74 "Drainage System Maintenance"
Landscape/Outdoor Pesticide Use	State that final landscape plans will accomplish all of the following. Preserve existing native trees, shrubs, and ground cover to the maximum extent possible. Design landscaping to minimize irrigation and runoff, to promote surface infiltration where appropriate, and to minimize the use of fertilizers and pesticides that can contribute to stormwater pollution. Where landscaped areas are used to retain or detain stormwater, specify plants that are tolerant of saturated soil conditions. Consider using pest-resistant plants, especially adjacent to hardscape. To insure successful establishment, select plants appropriate to site soils, slopes, climate, sun, wind, rain, land use, air movement, ecological consistency, and plant interactions. **(CASQA BMP SD-10, "Site Design and Landscape Planning" and SD-12, "Efficient Irrigation")**	Maintain landscaping using minimum or no pesticides. See applicable operational BMPs in "What you should know for…. Landscape and Gardening" at http://rcflood.org/stormwater/Error! Hyperlink reference not valid. Provide IPM information to new owners, lessees and operators Applicable operational BMPS in "What you should know for…Landscape and Gardening": • Never apply pesticides or fertilizers when rain is predicted within the next 48 hours. • Do not overwater. • Do not rake or blow leaves, clippings or pruning waste into the street, gutter or storm drain. Dispose of green waste by composting hauling it to a permitted landfill, or recycling it through city's program.

Refuse Areas	State how site refuse will be handled and provide supporting detail to what is shown on plans. State that signs will be posted on or near dumpsters with the words "Do not dump hazardous materials here" or similar. Trash enclosures shall have a solid impermeable roof with a minimum clearance height to allow the bin lid to completely open. Trash enclosures to be constructed of reinforced masonry without wooden gates. Walls shall be at least 6' high. Trash enclosures shall have a concrete slab floor. The concrete slab shall be graded to collect any spill within the enclosure. All trash bins in the trash enclosure shall be leak free and shall have a lid and be continuously closed. The enclosure area shall be protected from receiving direct rainfall or run-on from collateral surfaces. Method to handle site refuse: • Waste will be hauled by either public or commercial carriers. **(CASQA BMP SD-32, "Trash Storage Areas")**	State how the following will be implemented: Provide adequate number of receptacles. Inspect receptacles regularly; repair or replace leaky receptacles. Keep receptacles covered. Prohibit/prevent dumping of liquid or hazardous wastes. Post "no hazardous materials" signs. Inspect and pick up litter daily and clean up spills immediately. Keep spill control materials available on-site. See Fact Sheet SC-34, "Waste Handling and Disposal" in the CASQA Stormwater Quality Handbooks at www.cabmphandbooks.com Any Standing liquids must be cleaned up and disposed of property using a mop and a bucket or a wet/dry vacuum machine. All non-hazardous liquids without solid trash may be put in the sanitary sewer.

Loading Docks	Design loading docks to prevent stormwater run-on. Pave loading areas with concrete instead of asphalt. Loading dock areas are to be covered, or drainage is to be designed to preclude urban run-on and runoff. **(CASQA BMP SD-31, "Maintenance Bays and Docks")**	Move loaded and unloaded items indoors as soon as possible. See Fact Sheet SC-30, "Outdoor Loading and Unloading," in the CASQA Stormwater Quality Handbooks at www.cabmphandbooks.com Additional Operational BMPs suggested on Fact Sheet SC-30: • Check equipment regularly for leaks. • Conduct loading and unloading in dry weather if possible. • Loading or unloading of liquid should occur in the manufacturing building so that any spills that are not completely retained can be discharged to the sanitary sewer, treatment plant, or treated in a manner consistent with local sewer authorities and permit requirements.
Fire Sprinkler Test Water	Provide a means to drain fire sprinkler test water to the sanitary sewer.	See the note in Fact Sheet SC-41, "Building and Grounds Maintenance," in the CASQA Stormwater Quality Handbooks at www.cabmphandbooks.com Additional Operational BMPs suggested on Fact Sheet SC-41: • Do not allow discharge of fire sprinkler line flushing to storm drain or infiltration due to the potential high levels of pollutants in fire sprinkler line water.

Miscellaneous drain or Wash Water or Other Sources	• Boiler drain lines shall be directly or indirectly connected to the sanitary sewer system and may not discharge to the storm drain system. • Condensate drain lines may discharge to landscaped areas if the flow is small enough that runoff will not occur. Condensate drain lines may not discharge to the storm drain system. • Rooftop equipment with potential to produce pollutants shall be roofed and/or have secondary containment. • Any drainage sumps on-site shall feature a sediment sump to reduce the quantity of sediment in pumped water. • Avoid roofing, gutters, and trim made of copper or other unprotected metals that may leach into runoff. **(CASQA BMP SD-10, "Site Design and Landscape Planning" and SD-11, "Roof Runoff Controls")**	Additional Operational BMPs suggested on Fact Sheet SC-10: • Train employees to identify non-stormwater discharges and report them to the appropriate departments.
Plazas, sidewalks, and parking lots	None.	Sweep plazas, sidewalks, and parking lots regularly to prevent accumulation of litter and debris. Collect debris from pressure washing to prevent entry into the storm drain system. Collect washwater containing any cleaning agent or degreaser and discharge to the sanitary sewer not to a storm drain.
Interior floor drains and elevator shaft sump pumps	State interior floor drains and elevator shaft sump pumps will be plumbed to sanitary sewer.	Inspect and maintain drains to prevent blockages and overflow.

Permanent Source Control BMPs

- Mark all inlets with the words "No Dumping! Flows to River". Each drain inlet identified on the Source Control Exhibit shall be painted in either blue or white lettering on the drain inlet or immediately adjacent to the inlet.
- Interior floor drains and elevator shaft sump pumps will be plumbed to sanitary sewer. All drains located interior to the building will be directed into the sanitary sewer system within the building and discharge to the public sewer system.
- Minimize the number of entry ways and openings to the building at ground surface elevation. The building is designed to minimize the number of location where pests can enter the building. Doors are designed to close with minimal gaps to the frame and points of penetration into the walls by utilities are to be sealed.
- Preserve existing native trees, shrubs, and ground cover to the maximum extent possible. The existing project site contains grasses and low-lying vegetation that has grown in since the site was rough graded as part of a previous project. There is no native vegetation remaining. Due to the grading requirements of the site, the new growth will be removed during the grading process and new vegetation planted per the landscape plans.
- Design landscaping to minimize irrigation and runoff, to promote surface infiltration where appropriate, and to minimize the use of fertilizers and pesticides that can contribute to stormwater pollution. Landscape materials have been chosen with water wise practices in mind and drought tolerant plantings. Landscape areas are designed as sumps with overflow drains located higher than the bottom of sump to infiltrate low flows and reduce runoff. The use of fertilizers and pesticides will be in conformance with the CASQA recommendations of SC-41.
- Where landscaped areas are used to retain or detain stormwater, specify plants that are tolerant of saturated soil conditions. Plants located in landscape retention areas are tolerant to over-saturated soils for short periods of time.
- Consider using pest-resistant plants, especially adjacent to hardscape.
- To ensure successful establishment, select plants appropriate to site soils, slopes, climate, sun, wind, rain, land use, air movement, ecological consistency, and plant interactions. The landscape plant list for this project has been specifically designed to work with the project site and to be in conformance with the area of Fallbrook design requirements.
- Design of designated cleaning areas in food uses to be determined in final design.
- Items to be cleaned in food uses and sizing of cleaning areas to be determined in final design.
- Site refuse will be contained in designated trash areas and equipped with roofs or be self-containing equipment (trash compactors) that will prevent run-on.
- Signs to be posted in designated trash areas reading "Do not dump hazardous materials here" or similar.
- Provide a means to drain fire sprinkler test water to the sanitary sewer. Drains located internal to the building will drain into the building's sanitary sewer system and discharge into the public sewer system.
- Condensate drain lines may discharge to landscaped areas if the flow is small enough that runoff will not occur. Condensate drain lines may not discharge to the storm drain system. Condensate drain lines will not directly connect to the storm drain system. Drain lines will either discharge into landscape areas for infiltration or connect directly to the sewer system.
- Rooftop mounted equipment with potential to produce pollutants shall be roofed and/or have secondary containment. Rooftop equipment will discharge through the roof drain system into landscape areas for infiltration.
- Avoid roofing, gutters, and trim made of copper or other unprotected metals that may leach into runoff. Unprotected metals will not be used for the roofing, gutter or building trim.

Operational Source Control BMPs

- Maintain and periodically repaint or replace inlet markings. Inlet markings to be inspected on an annual basis for fading. Markings to be repainted as required.
- Provide stormwater pollution prevention information to new site owner, lessees or operators. A copy of the SUSMP is to be kept on-site at all times by management. At time of hire, operation and maintenance staff are to be educated on the source control BMPs and treatment BMPs for the project.
- See applicable operational BMPs in Fact Sheet SC-44, "Drainage System Maintenance," in the CASQA Stormwater Quality Handbooks at www.cabmphandbooks.com. Educational material, included Fact Sheet SC-44, found within this SUSMP report is to be made available to maintenance staff by owner.
- Include the following in lease agreements: "Tenant shall not allow anyone to discharge anything to storm drains or to store or deposit materials so as to create a potential discharge to storm drains." While the current project is not intended to be leased, the owner shall include this language in the event that the property does become leased.
- Inspect and maintain drains to prevent blockages and overflow. Drains internal to the building will be routinely inspected and maintained by the maintenance staff.
- Provide Integrated Pest Management (IPM) information to owners, lessees, and operators. Owner shall develop an IPM prior to occupancy and provide this information to the maintenance staff at time of employment and provide to future property owner or lessees.
- Maintain landscaping using minimum or no pesticides. Plantings chosen for the site are to be pest-resistant plants around the building and pesticides used are to be environmentally sensitive varieties.
- See applicable operational BMPs in Fact Sheet SC-41, "Building and Grounds Maintenance," in the CASQA Stormwater Quality Handbooks.
- Provide IPM information to new owners, lessees and operators. Owner to develop the IPM for the project and distribute to maintenance staff at time of employment and provide to future lessees and new owners.
- Owner/maintenance staff to maintain a proper number of trash receptacles on hand to ensure available storage space. Routine inspection of trash receptacles for leaking or trash accumulation. Inspection of "No hazardous materials" signage, replace as necessary. See Fact Sheet SC-34 "Waste Handling and Disposal" in the CASQA Stormwater Quality Handbook.
- Owner/maintenance staff to move unloaded items indoors as soon as possible.
- See Fact Sheet SC-30 "Outdoor Loading and Unloading" in the CASQA Stormwater Quality Handbook.
- See the note in Fact Sheet SC-41, "Building and Grounds Maintenance," in the CASQA Stormwater Quality Handbooks. Owner to provide BMP fact sheet to maintenance staff at time of employment and to future lessees.
- Plazas, sidewalks, and parking lots shall be swept regularly to prevent the accumulation of litter and debris. Debris from pressure washing shall be collected to prevent entry into the storm drain system. Washwater containing any cleaning agent or degreaser shall be collected and discharged to the sanitary sewer and not discharged to a storm drain. Owner to hire parking lot sweeping service or provide maintenance staff proper vacuuming equipment to collect litter and debris from the site. In the event water is used to clean the site, wastewater shall be collected and disposed of properly, not dumped down the storm drain system.

Section H: Construction Plan Checklist

Populate Table H.1 below to assist the plan checker in an expeditious review of your project. The first two columns will contain information that was prepared in previous steps, while the last column will be populated with the corresponding plan sheets. This table is to be completed with the submittal of your final Project-Specific WQMP.

Table H.1 Construction Plan Cross-reference

BMP No. or ID	BMP Identifier and Description	Corresponding Plan Sheet(s)
2-1 D	MWS No. 2-1	WQMP DMA Map – Sheet 3
2-2 D	MWS No. 2-2	WQMP DMA Map – Sheet 3
2-3 D	MWS No. 2-3	WQMP DMA Map – Sheet 5
2-4 D	MWS No. 2-4	WQMP DMA Map – Sheet 5
2-5 D	MWS No. 2-5	WQMP DMA Map – Sheet 2
2-6 D	MWS No. 2-6	WQMP DMA Map – Sheet 2
2-7 D	MWS No. 2-7	WQMP DMA Map – Sheet 2
2-8 D	MWS No. 2-8	WQMP DMA Map – Sheet 2
2-9 D	MWS No. 2-9	WQMP DMA Map – Sheet 3
2-10 D	MWS No. 2-10	WQMP DMA Map – Sheet 3
2-11 D	MWS No. 2-11	WQMP DMA Map – Sheet 2
2-12 D	MWS No. 2-12	WQMP DMA Map – Sheet 2
2-13 D	MWS No. 2-13	WQMP DMA Map – Sheet 2
3-1.1 D	MWS No. 3-1.1	WQMP DMA Map – Sheet 2
3-1.2 D	MWS No. 3-1.2	WQMP DMA Map – Sheet 2
3-2 D	MWS No. 3-2	WQMP DMA Map – Sheet 2
5-1 D	MWS No. 5-1	WQMP DMA Map – Sheet 3
5-2 D	MWS No. 5-2	WQMP DMA Map – Sheet 3
7-1 D	MWS No. 7-1	WQMP DMA Map – Sheet 3
7-2 D	MWS No. 7-2	WQMP DMA Map – Sheet 3
9-1 D	MWS No. 9-1	WQMP DMA Map – Sheet 3
9-2 D	MWS No. 9-2	WQMP DMA Map – Sheet 3
9-3 D	MWS No. 9-3	WQMP DMA Map – Sheet 4
9-4 D	MWS No. 9-4	WQMP DMA Map – Sheet 4
9-5 D	MWS No. 9-5	WQMP DMA Map – Sheet 4
9-6 D	MWS No. 9-6	WQMP DMA Map – Sheet 4
9-7 D	MWS No. 9-7	WQMP DMA Map – Sheet 4

9-8 D	MWS No. 9-8	WQMP DMA Map – Sheet 4
9-9 D	MWS No. 9-9	WQMP DMA Map – Sheet 4
9-10 D	MWS No. 9-10	WQMP DMA Map – Sheet 4
16-1 D	MWS No. 16-1	WQMP DMA Map – Sheet 2
16-2 D	MWS No. 16-2	WQMP DMA Map – Sheet 5
16-3 D	MWS No. 16-3	WQMP DMA Map – Sheet 5

Note that the updated table — or Construction Plan WQMP Checklist — is **only a reference tool** to facilitate an easy comparison of the construction plans to your Project-Specific WQMP. Co-Permittee staff can advise you regarding the process required to propose changes to the approved Project-Specific WQMP.

Section I: Operation, Maintenance and Funding

The Copermittee will periodically verify that Stormwater BMPs on your site are maintained and continue to operate as designed. To make this possible, your Copermittee will require that you include in Appendix 9 of this Project-Specific WQMP:

1. A means to finance and implement facility maintenance in perpetuity, including replacement cost.
2. Acceptance of responsibility for maintenance from the time the BMPs are constructed until responsibility for operation and maintenance is legally transferred. A warranty covering a period following construction may also be required.
3. An outline of general maintenance requirements for the Stormwater BMPs you have selected.
4. Figures delineating and designating pervious and impervious areas, location, and type of Stormwater BMP, and tables of pervious and impervious areas served by each facility. Geo-locating the BMPs using a coordinate system of latitude and longitude is recommended to help facilitate a future statewide database system.
5. A separate list and location of self-retaining areas or areas addressed by LID Principles that do not require specialized O&M or inspections but will require typical landscape maintenance as noted in Chapter 5, pages 85-86, in the WQMP Guidance. Include a brief description of typical landscape maintenance for these areas.

Your local Co-Permittee will also require that you prepare and submit a detailed Stormwater BMP Operation and Maintenance Plan that sets forth a maintenance schedule for each of the Stormwater BMPs built on your site. An agreement assigning responsibility for maintenance and providing for inspections and certification may also be required.

Details of these requirements and instructions for preparing a Stormwater BMP Operation and Maintenance Plan are in Chapter 5 of the WQMP Guidance Document.

Maintenance Mechanism: The property owner will record an agreement with the County of Riverside to maintain the BMPs outlined in this report.

Will the proposed BMPs be maintained by a Home Owners' Association (HOA) or Property Owners Association (POA)?

☐ Y ☒ N

Until such a time that the March Joint Powers Authority Landscape Lighting and Maintenance District Number 1 accepts the Master Meridian Business Park Project, West Campus - Lower Plateau development for maintenance, the owner shall be responsible for completing and maintaining inspection reports for all onsite Structural Source Control and Treatment Control BMPs. Reports shall include the date of the inspection, the name of person who performed the inspection, the observations made, and any actions taken. Reports shall be maintained for three years. The records shall be available for inspection upon request of the City Engineer, Regional Water Control Board, or the designated City Representative.

Maintenance and cleaning of the LID BMPs shall be in accordance with the Maintenance Responsibility/Frequency Matrix in Appendix 9.

The following party is responsible for the operation and maintenance of all Structural Source Control and Treatment Control BMPs for the roadways and adjacent bioswales once accepted by the MJPA LLMD Number 1:

March Joint Powers Authority (MJPA)
14205 Meridian Parkway, Ste. 140
Riverside, CA 92518
Contact: Danny Whaley

The following party is responsible for the operation and maintenance of all Structural Source Control and Treatment Control BMPs for the undeveloped lots until such time that the permanent sale of the Lot and transfer of ownership occurs:

Meridian Park, LLC
1156 North Mountain Avenue
Upland, CA 91785
Contact: Jeff Gordon

The owner will be responsible for ensuring that all personnel involved in the routine inspection, routine and non-routine maintenance, and record keeping tasks required by the O&M Plan are familiar with the contents of the WQMP and the requirements for the routine inspection as well as routine and non-routine tasks as described in Appendix 9. Corresponding fact sheets for source control BMPs and treatment control BMPs, as well as other educational materials, can be found in Appendix 10.

The owner will be responsible for ensuring that individuals involved in O&M activities, including but not limited to contractors, will be trained by the responsible party/trainer according to the training program herein.

Each proposed BMP for the feature developments will be maintained by the property owner.

The owner shall be responsible for documenting all training activities and for maintaining records related to training. At a minimum, training documentation shall include:
• Certification of Receipt and Review of the O&M Plan completed by trainees and owner
• Logging of all training activities at the same time that all training is complete.

Forms for documentation of training are included in Appendix 10. Training records must be maintained for a minimum period of 3 years.

MJPA and affiliated companies will retain vesting ownership of the property. They will be responsible for long-term maintenance, including up-keep of the BMPs for which they will provide funding.

			Maintenance Responsibility		Funding Mechanism for Maintenance		Owner Maintenance Cost		LLMD Maintenance Cost	
BMP	Used	Not Used	Owner **	MJPA	Owner	Developer	1-year ($)	2-year ($)	1-year ($)	2-year ($)
Hydro seeding & Mulching	☐	☒	☐	☐	☐	☐				
Landscape Private	☒	☐	☒	☐	☒	☐	$12,000	$12,000	12,000	12,000
Landscape Public	☐	☒	☒	☒	☐	☐				
Lawns	☐	☒	☐	☐	☐	☐				
Impervious permanent cover (concrete/ asphalt) Private	☒	☐	☒	☐	☒	☐	$20,000	$20,000	$20,000	$20,000
Impervious permanent cover (concrete/ asphalt) Public	☐	☒	☐	☐	☐	☐				
Pervious permanent cover (gravel)	☒	☐	☒	☐	☒	☐	$800	$800	$800	$800
Down drains	☐	☐	☐	☐	☒	☐	$1,666	$1,666	$1,666	$1,666
Ribbon Gutter Public	☐	☒	☐	☒	☐	☐				
Ribbon Gutter Private	☐	☒	☐	☐	☐	☐				
Curb & gutter Public	☒	☐	☐	☒	☐	☐				
Curb & gutter Private	☒	☐	☒	☐	☒	☐	$2,300	$2,300	$2,300	$2,300
Storm Drain	☒	☐	☒	☐	☒	☐	$1,000	$1,000	$1,000	$1,000
Detention Basin	☒	☐	☒	☐	☐	☒	$12,000	$12,000	$12,000	$12,000
Vehicle Wash Area	☐	☐	☐	☐	☐	☒	N/A	N/A	N/A	N/A
Education Materials	☒	☐	☒	☐	☒	☐	$0	$0	$0	$0

* Provide annual costs (1-year and 2-year) for all publicly maintained BMPs. Specifically include the costs for all public landscaping and treatment control that are responsibility of the City of Landscape Maintenance District.

** Maintenance funding contact information for each privately maintained (by owner, POA or HOA) BMP must be included.

Appendix 1: Maps and Site Plans

Location Map, WQMP Site Plan and Receiving Waters Map

VICINITY MAP

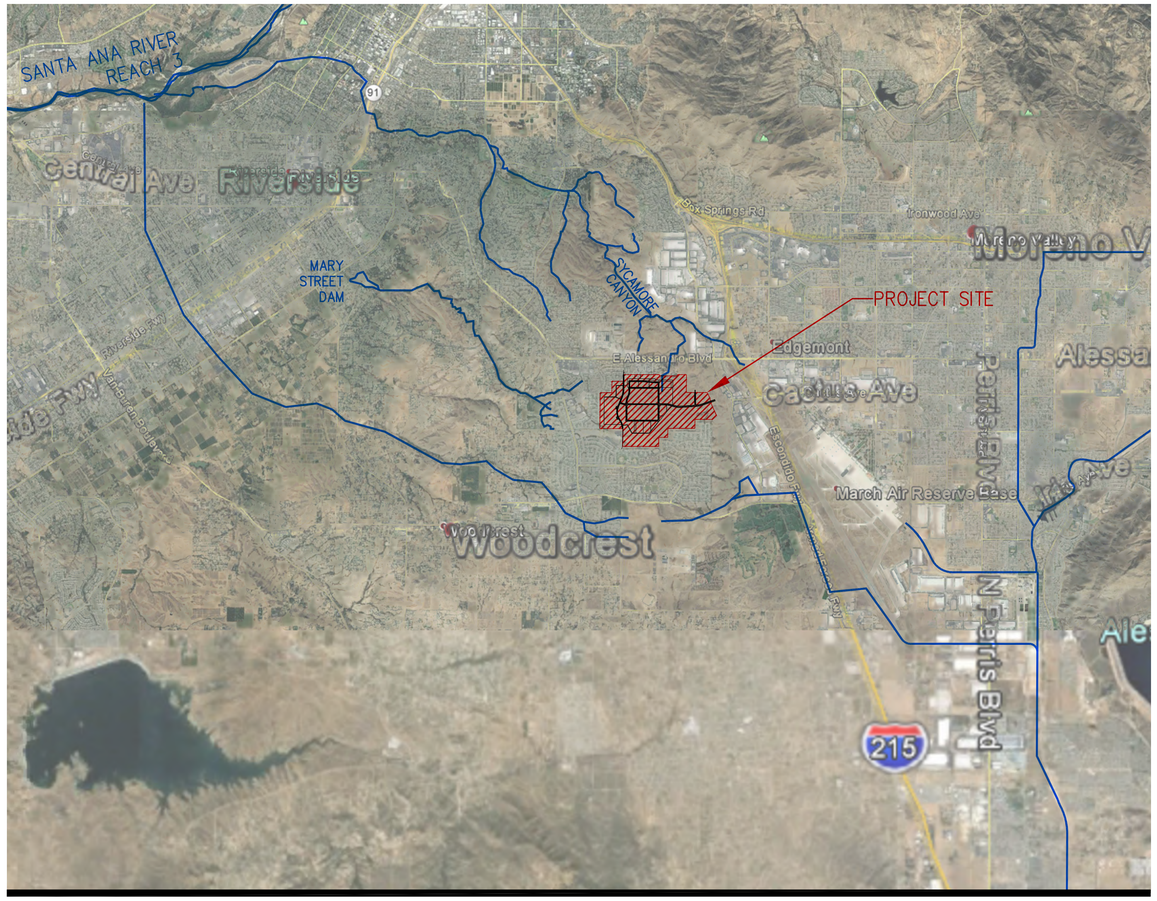

MATCHLINE - SEE ABOVE RIGHT

MATCHLINE - SEE BELOW LEFT

N

SCALE IN MILES

0 0.5 1 2

SCALE: 1" = 1 MILE

DRC Engineering, Inc.
Civil Engineering/Land Surveying/Land Planning
160 S. Old Springs Road
Suite 210
Anaheim Hills, CA 92808
714-685-6860

NOT FOR CONSTRUCTION

NO.:	REVISION:	DATE:

PROJECT: **MERIDIAN - UPPER PLATEAU**
MARCH JOINT POWERS AUTHORITY
RIVERSIDE COUNTY, CALIFORNIA

DRAWING NAME: **RECEIVING WATERS EXHIBIT**

ISSUE:	EXHIBIT
DATE:	9/14/2021
CHECKED: LI	DRAWN: LI
DRAWING FILE:	20750EXH
PROJECT NO.:	**20-750**
SHEET NUMBER:	**1**
OF	1 SHEETS
SCALE:	**AS SHOWN**

FILENAME: M:\2020\20-750 Meridian Upper Plateau\WQMP\Master WQMP\Appendix 1 Maps and Site Plans\20750 Receiving Waters.dwg, LAST SAVED ON: Sep 14 2021 11:36am, PLOTTED BY: LEO, ON: Sep 14 2021 11:36am, CFG:

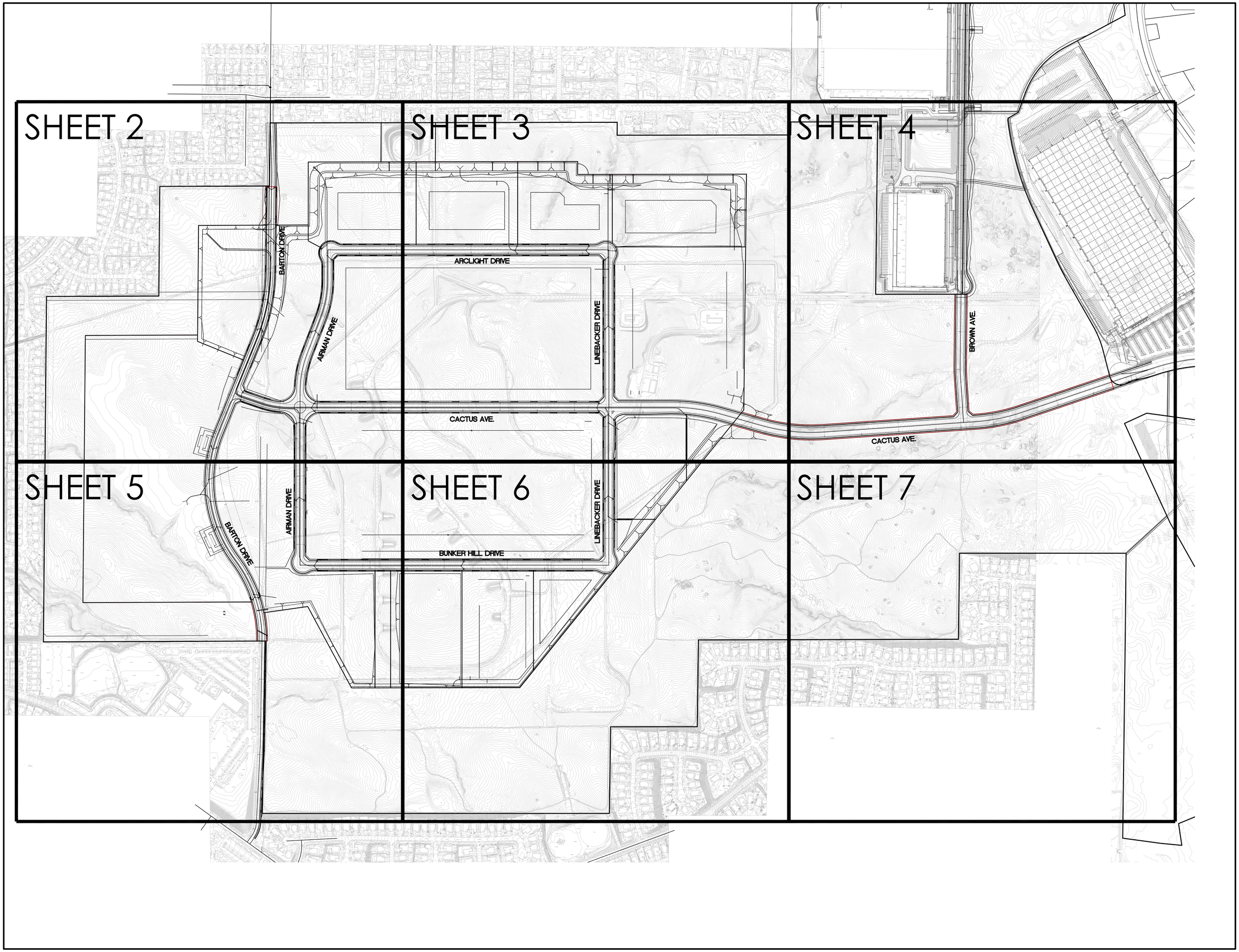

NOT FOR CONSTRUCTION

DRC Engineering, Inc.
Civil Engineering/Land Surveying/Land Planning
160 S. Old Springs Road
Suite 210
Anaheim Hills, CA 92808
714-685-6860

NO.:	REVISION:	DATE:

PROJECT:

MERIDIAN WEST CAMPUS
UPPER PLATEAU
MARCH JOINT POWERS AUTHORITY

DRAWING NAME:

WQMP DMA MAP

ISSUE:	WQMP
DATE:	9/14/2021
CHECKED: LJ	DRAWN: LJ
DRAWING FILE: WQMP DMA	
PROJECT NO.: 20-750	
SHEET NUMBER: 1 OF 7 SHEETS	
SCALE: AS SHOWN	

FILENAME: M:\2020\20-750 Meridian Upper Plateau\WQMP\Master WQMP_CAD\20750 WQMP DMA Map.dwg, LAST SAVED ON: Sep 14 2021 7:11am PLOTTED BY: LEO, ON: Sep 14 2021 7:12am, CFC:

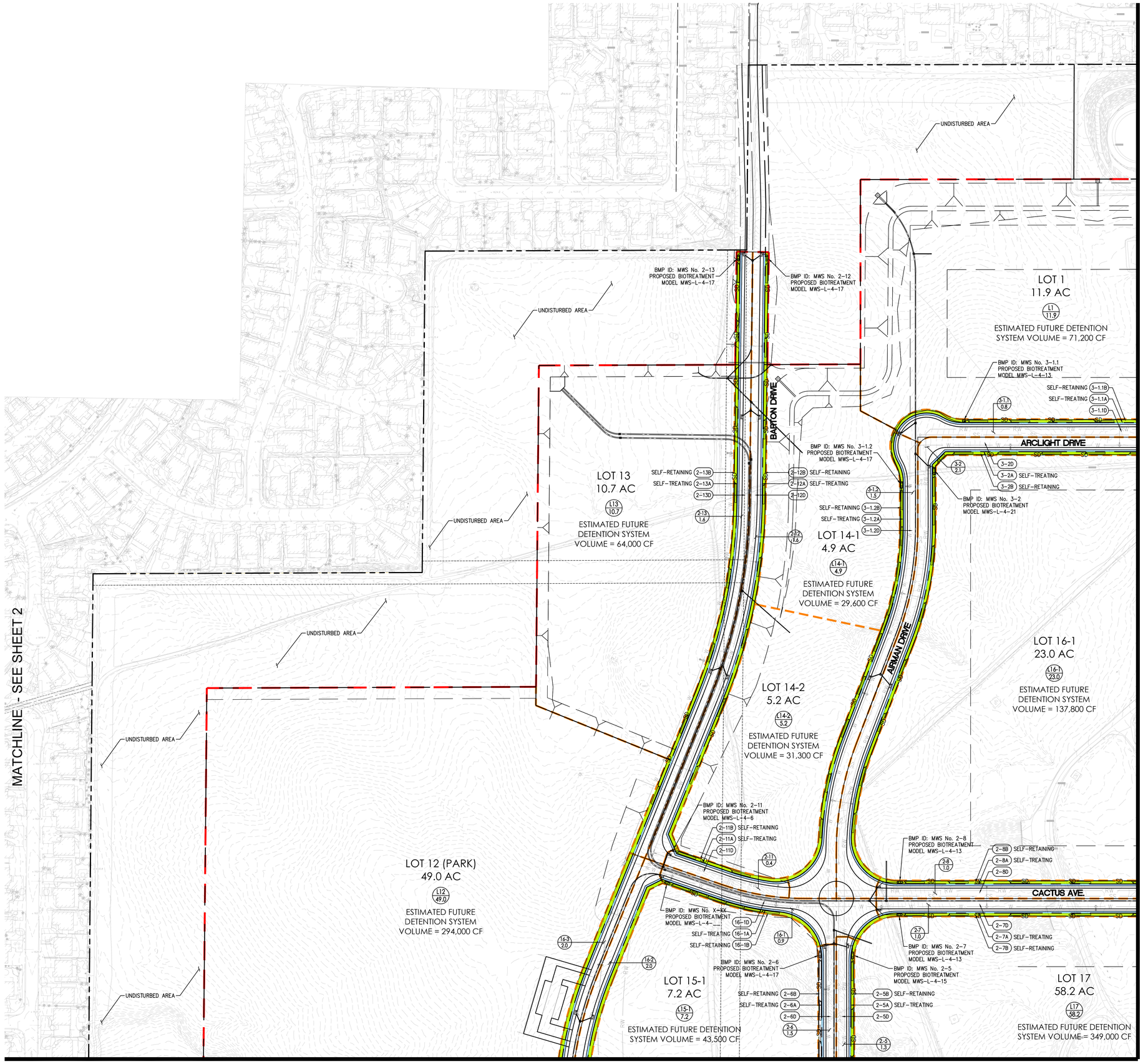

LEGEND

- TRIBUTARY AREA FOR BMP
- DMA SUBAREA BOUNDARIES
- SELF RETAINING AREA/ LANDSCAPE BIOSWALE
- SELF TREATING AREA

NOTE

- NO RUN-ON ANTICIPATED FOR THE PROJECT SITE

C / 0.8 — DMA DESIGNATION / AREA

NOT FOR CONSTRUCTION

DRC Engineering, Inc.
Civil Engineering/Land Surveying/Land Planning
160 S. Old Springs Road
Suite 210
Anaheim Hills, CA 92808
714-685-6860

NO.:	REVISION:	DATE:

PROJECT:

MERIDIAN WEST CAMPUS
UPPER PLATEAU
MARCH JOINT POWERS AUTHORITY

DRAWING NAME:

WQMP DMA MAP

ISSUE:	WQMP
DATE:	9/14/2021
CHECKED: LI	DRAWN: LI
DRAWING FILE:	WQMP DMA
PROJECT NO.:	20-750
SHEET NUMBER:	2 OF 7 SHEETS
SCALE:	AS SHOWN

FILENAME: M:\2020\20-750 Meridian Upper Plateau\WQMP\Master WQMP_CAD\20750 WQMP DMA Map.dwg, LAST SAVED ON: Sep 14 2021 7:11am PLOTTED BY: LEO, ON: Sep 14 2021 7:13am, CFG:

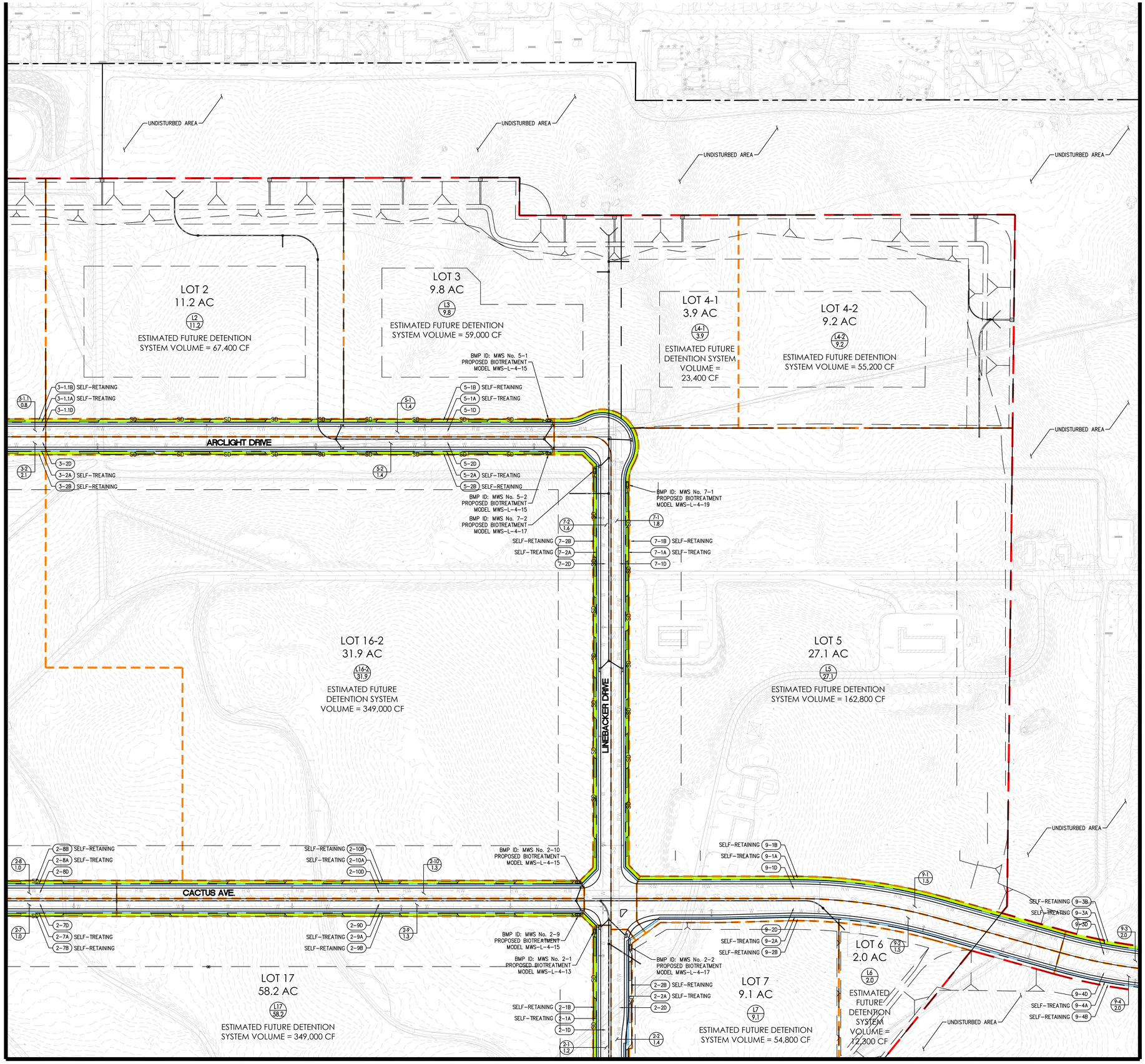

LEGEND

- TRIBUTARY AREA FOR BMP
- DMA SUBAREA BOUNDARIES
- SELF RETAINING AREA/ LANDSCAPE BIOSWALE
- SELF TREATING AREA

NOTE

- NO RUN-ON ANTICIPATED FOR THE PROJECT SITE

C / 0.8 — DMA DESIGNATION / AREA

NOT FOR CONSTRUCTION

DRC Engineering, Inc.
Civil Engineering/Land Surveying/Land Planning
160 S. Old Springs Road
Suite 210
Anaheim Hills, CA 92808
714-685-6860

NO.:	REVISION:	DATE:

PROJECT:

MERIDIAN WEST CAMPUS
UPPER PLATEAU
MARCH JOINT POWERS AUTHORITY

DRAWING NAME:

WQMP DMA MAP

ISSUE:	WQMP
DATE:	9/14/2021
CHECKED: LJ	DRAWN: LJ
DRAWING FILE: WQMP DMA	
PROJECT NO.: 20-750	
SHEET NUMBER: 3 OF 7 SHEETS	
SCALE: AS SHOWN	

FILENAME: M:\2020\20-750 Meridian Upper Plateau\WQMP\Master WQMP_CAD\20750 WQMP DMA Map.dwg, LAST SAVED ON: Sep 14 2021 7:11am PLOTTED BY: LEO, ON: Sep 14 2021 7:13am, CFG:

MATCHLINE - SEE SHEET 3

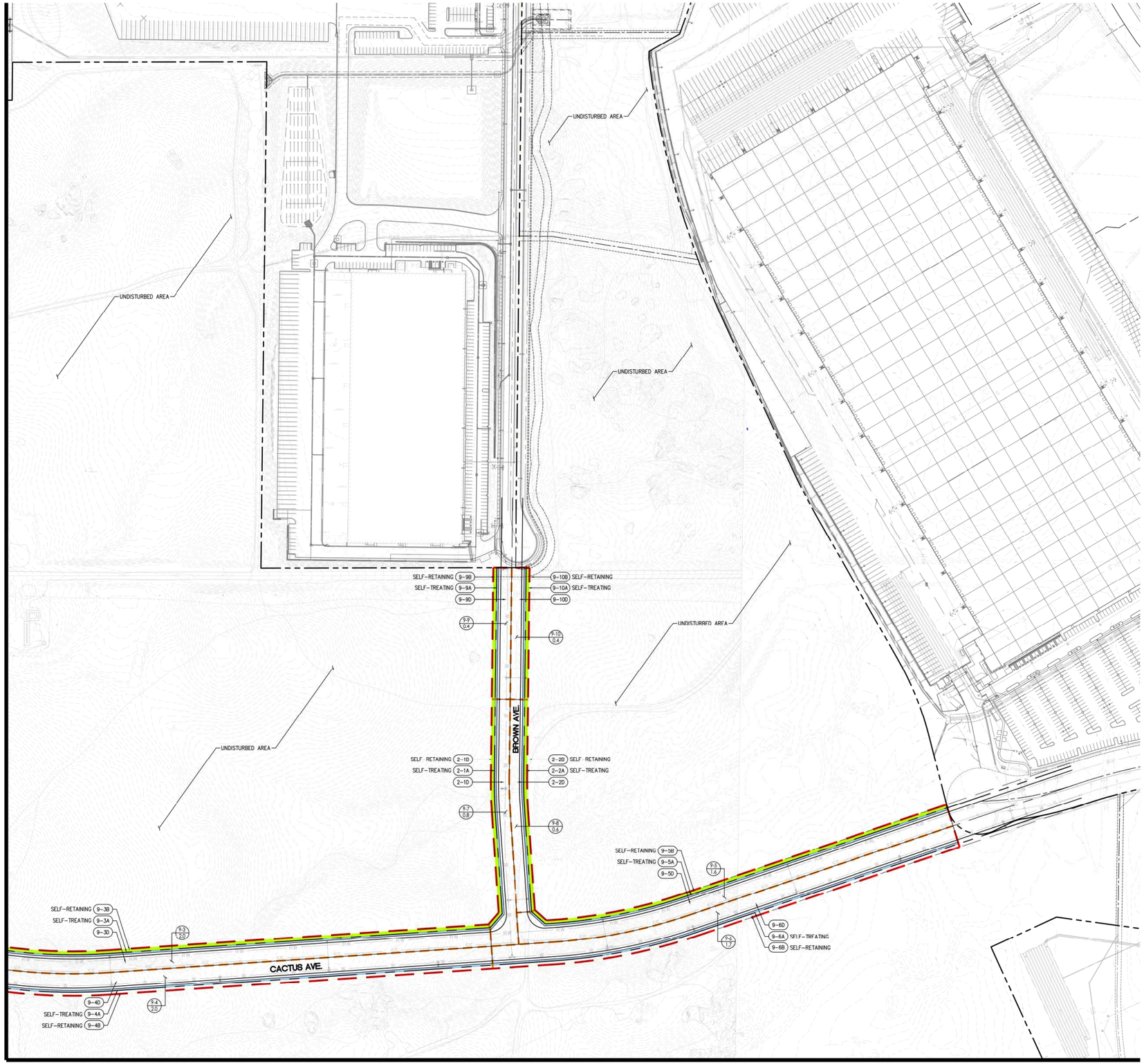

MATCHLINE - SEE SHEET 7

LEGEND

- TRIBUTARY AREA FOR BMP
- DMA SUBAREA BOUNDARIES
- SELF RETAINING AREA/ LANDSCAPE BIOSWALE
- SELF TREATING AREA

NOTE
- NO RUN-ON ANTICIPATED FOR THE PROJECT SITE

C/0.8 — DMA DESIGNATION / AREA

NOT FOR CONSTRUCTION

160 S. Old Springs Road
Suite 210
Anaheim Hills, CA 92808
714-685-6860
DRC Engineering, Inc.
Civil Engineering/Land Surveying/Land Planning

NO.:	REVISION:	DATE:

PROJECT:
MERIDIAN WEST CAMPUS
UPPER PLATEAU
MARCH JOINT POWERS AUTHORITY

DRAWING NAME:
WQMP DMA MAP

ISSUE:	WQMP
DATE:	9/14/2021
CHECKED: LI	DRAWN: LI
DRAWING FILE: WQMP DMA	
PROJECT NO.: 20-750	
SHEET NUMBER: 4 OF 7 SHEETS	
SCALE: AS SHOWN	

FILENAME: M:\2020\20-750 Meridian West\Plotting\WQMP\Meridian WQMP_LAYOUT2750 WQMP DMA Map.dwg, LAYOUT: DMA3 DATE: Sep 14 2021 7:11am PLOTTED BY: LEO, DR.

MATCHLINE - SEE SHEET 2

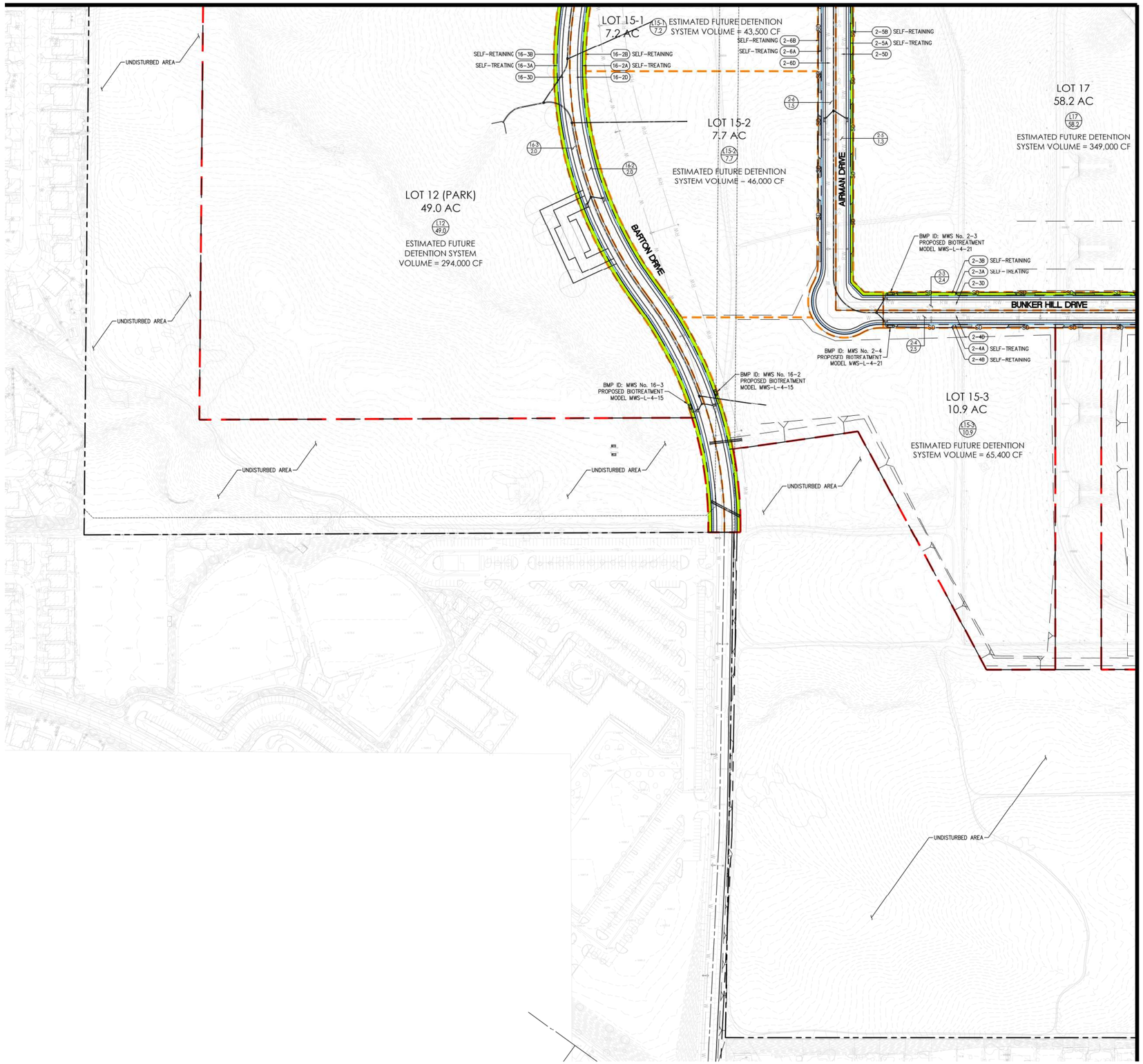

MATCHLINE - SEE SHEET 6

LEGEND

- TRIBUTARY AREA FOR BMP
- DMA SUBAREA BOUNDARIES
- SELF RETAINING AREA/ LANDSCAPE BIOSWALE
- SELF TREATING AREA

NOTE
- NO RUN-ON ANTICIPATED FOR THE PROJECT SITE

(C / 0.8) — DMA DESIGNATION / AREA

NOT FOR CONSTRUCTION

160 S. Old Springs Road
Suite 210
Anaheim Hills, CA 92808
714-685-6860
DRC Engineering, Inc.
Civil Engineering/Land Surveying/Land Planning

NO.:	REVISION:	DATE:

PROJECT:
MERIDIAN WEST CAMPUS
UPPER PLATEAU
MARCH JOINT POWERS AUTHORITY

DRAWING NAME:
WQMP DMA MAP

ISSUE:	WQMP
DATE:	9/14/2021
CHECKED: LI	DRAWN: LI
DRAWING FILE:	WQMP DMA
PROJECT NO.:	20-750
SHEET NUMBER:	5 OF 7 SHEETS
SCALE:	AS SHOWN

FILENAME: M:\2020\20-750 Meridian UPP Plateau\WQMP\Master WQMP\CAD\20750 WQMP DMA Map.dwg, LAST SAVED ON: Sep 14 2021 7:11pm PLOTTED BY: LEO, ON: Sep 14 2021 7:11am, OFC

MATCHLINE - SEE SHEET 3

MATCHLINE - SEE SHEET 5

MATCHLINE - SEE SHEET 7

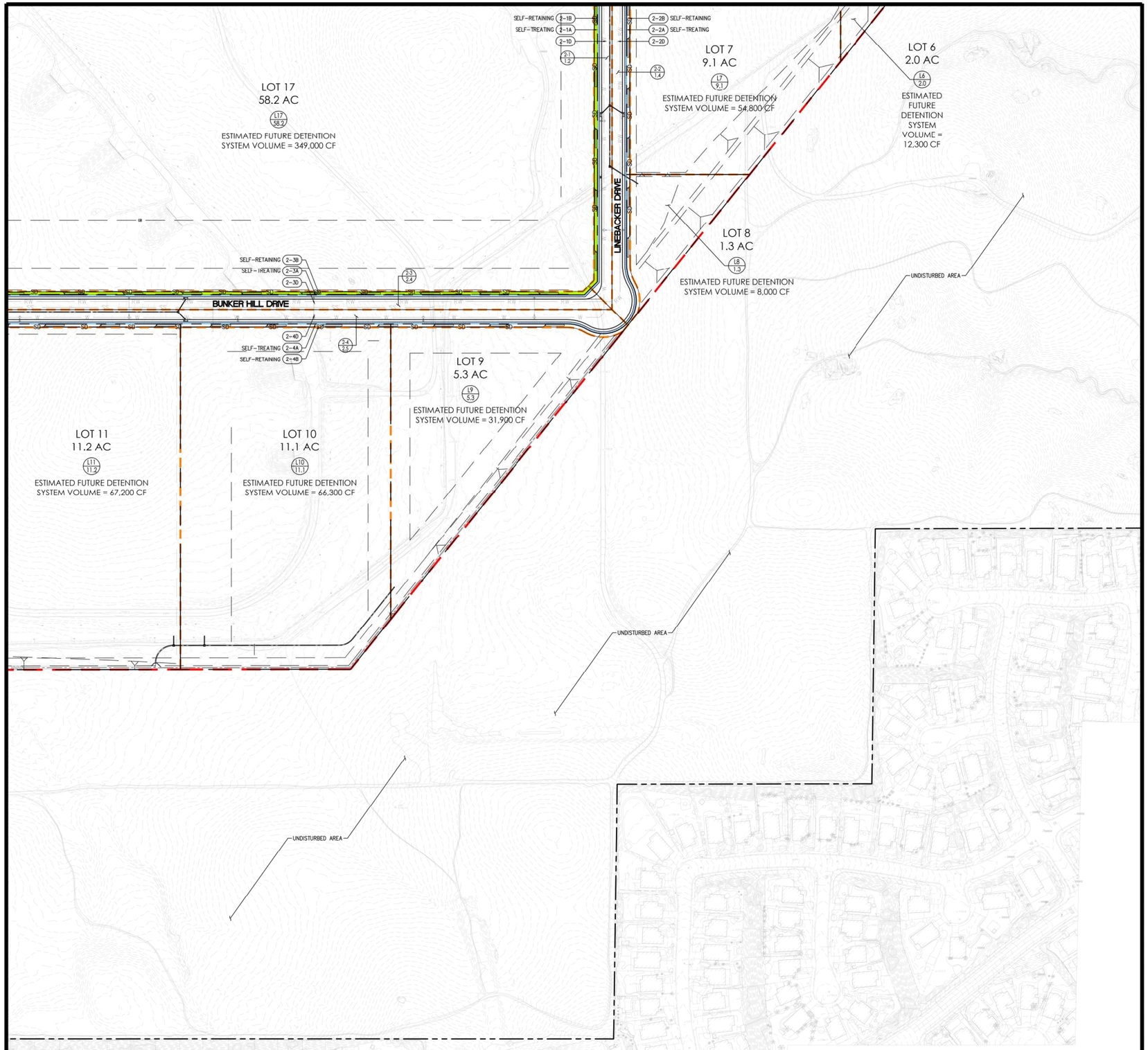

LEGEND

- TRIBUTARY AREA FOR BMP
- DMA SUBAREA BOUNDARIES
- SELF RETAINING AREA/ LANDSCAPE BIOSWALE
- SELF TREATING AREA

NOTE
- NO RUN-ON ANTICIPATED FOR THE PROJECT SITE

C / 0.8 — DMA DESIGNATION / AREA

160 S. Old Springs Road
Suite 210
Anaheim Hills, CA 92808
714-685-6860
DRC Engineering, Inc.
Civil Engineering/Land Surveying/Land Planning

NOT FOR CONSTRUCTION

NO.:	REVISION:	DATE:

PROJECT:
MERIDIAN WEST CAMPUS
UPPER PLATEAU
MARCH JOINT POWERS AUTHORITY

DRAWING NAME:
WQMP DMA MAP

ISSUE:	WQMP
DATE:	9/14/2021
CHECKED: LI	DRAWN: LI
DRAWING FILE:	WQMP DMA
PROJECT NO.:	20-750
SHEET NUMBER:	6 OF 7 SHEETS
SCALE:	AS SHOWN

FILENAME: M:\2020\20-750 Meridian WQMP\Master WQMP\CAD\OTHS WQMP DMA Map.dwg, LAST SAVED ON: Sep 14 2021 7:11pm PLOTTED BY: LEO, ON: Sep 14 2021 7:15pm, OTS

MATCHLINE - SEE SHEET 4

MATCHLINE - SEE SHEET 6

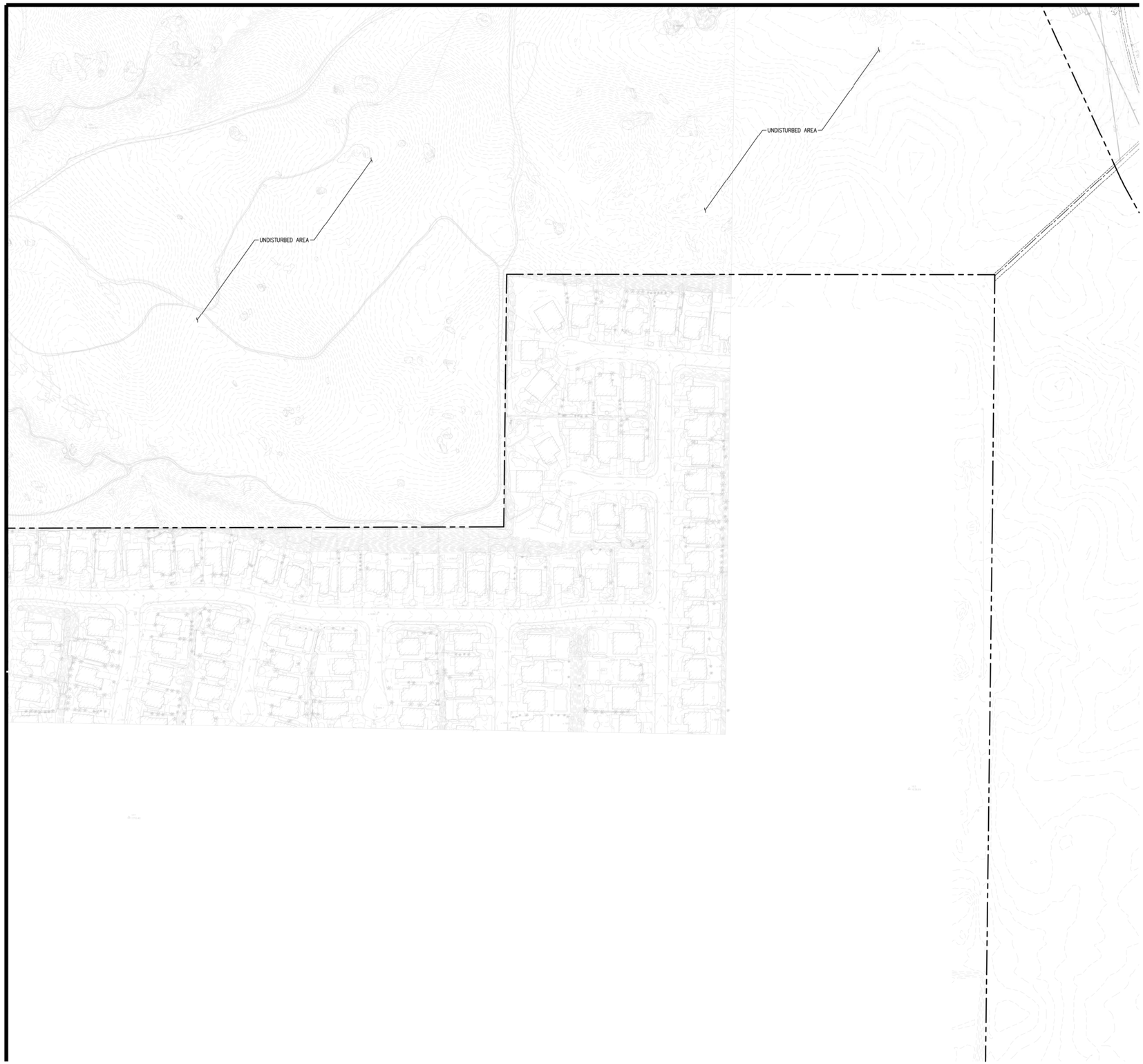

LEGEND

- TRIBUTARY AREA FOR BMP
- DMA SUBAREA BOUNDARIES
- SELF RETAINING AREA/ LANDSCAPE BIOSWALE
- SELF TREATING AREA

NOTE
- NO RUN-ON ANTICIPATED FOR THE PROJECT SITE

C / 0.8 — DMA DESIGNATION / AREA

160 S. Old Springs Road
Suite 210
Anaheim Hills, CA 92808
714-685-6860

DLRC Engineering, Inc.
Civil Engineering/Land Surveying/Land Planning

NOT FOR CONSTRUCTION

NO.:	REVISION:	DATE:

PROJECT:

MERIDIAN WEST CAMPUS
UPPER PLATEAU
MARCH JOINT POWERS AUTHORITY

DRAWING NAME:

WQMP DMA MAP

ISSUE:	WQMP
DATE:	9/14/2021
CHECKED: LI	DRAWN: LI
DRAWING FILE:	WQMP DMA
PROJECT NO.:	20-750
SHEET NUMBER:	7
OF	7 SHEETS
SCALE:	AS SHOWN

FILENAME: M:\2020\20-750 Meridian West\Master WQMP\CAD\DPSS WQMP DMA Map.dwg, LAST SAVED ON: Sep 14 2021 7:11pm, PLOTTED BY: LEO, ON: Sep 14 2021 7:15pm, OFF

Appendix 2: Construction Plans

Conceptual Grading Plans

SHEET INDEX

SCALE: 1" = 1000'

LLMD REQUIREMENTS:

- PRIOR TO SITE GRADING THE GRADING CONTRACTOR SHALL CONTACT THE MARCH JPA LANDSCAPE AND LIGHTING MAINTENANCE DISTRICT (LLMD) MANAGER AT (951) 656-7000 TO COORDINATE ALL ACTIVITY AND IMPACTS UPON LLMD FACILITIES WITHIN THE PUBLIC RIGHT OF WAY AND LANDSCAPE EASEMENTS. THE COORDINATION SHALL ASSURE UNINTERRUPTED OPERATION OF THE LLMD IRRIGATION SYSTEM AND SHALL IDENTIFY ANY IMPACTS ON LLMD MAINLINES, WIRES, LATERALS AND IRRIGATION COMPONENTS, INCLUSIVE OF THE NEED TO MOVE OR SLEEVE LLMD FACILITIES AS DETERMINED BY THE LLMD MANAGER.
- ALL LLMD PRESSURE MAIN LINE AND LATERAL CROSSINGS BENEATH PAVED AREAS SHALL BE ENCASED IN SCHEDULE 40 PVC SLEEVES TWICE THE DIAMETER OF THE PIPE. SLEEVES SHALL BE PLACED AT A DEPTH OF 24" BENEATH FINISHED SURFACE, MEASURED FROM THE TOP OF THE SLEEVE. CONTROL WIRES SHALL BE SEPARATE SLEEVES WITH A MINIMUM DIAMETER OF 2". WIRE SLEEVES SHALL BE SIZED SO THAT WIRE BUNDLES MAY BE PULLED WITHOUT BINDING. ON EACH SIDE OF PAVED AREAS A 10" ROUND VALVE BOX WITH WIRE CONNECTIONS SHALL BE INSTALLED. PIN TIE CONNECTORS SHALL BE USED IN WIRE CONNECTION BOX AND MUST BE BRANDED ON THE VALVE BOX LID WITH "SW" FOR FUTURE IDENTIFICATION.
- ALL CHANGES TO THE LLMD EASEMENT AREA SHALL BE COMPLETED IN ACCORDANCE WITH THE APPROVED LLMD LANDSCAPE PLANS AND AN "AS BUILT" DRAWING SHALL BE SUBMITTED AND APPROVED UPON COMPLETION AND INSPECTION OF THE WORK. ALL REPAIRS AND/OR INSTALLATIONS IN THE LLMD RIGHT OF WAY AND EASEMENT AREAS MUST BE INSPECTED BY THE LLMD MANAGER.
- ALL LLMD IRRIGATION DAMAGED BY CONSTRUCTION ACTIVITIES SHALL BE REPAIRED BY A QUALIFIED IRRIGATION TECHNICIAN WITHIN TWENTY FOUR (24) HOURS TO ENSURE LLMD PLANT MATERIAL DOES NOT INCUR ADDITIONAL DAMAGE OR LOSS OR A $500 FINE PER DAY WILL BE ACCESSED UNTIL COMPLETED. ALTERNATIVELY THE MJPA CAN HAVE THEIR LLMD CONTRACTOR REPAIR ANY DAMAGE AND BILL THE OWNER DIRECTLY AT THE REQUEST OF THE OWNER.
- ALL LLMD PLANT MATERIAL DAMAGED SHALL BE REPLACED WITH LIKE SIZED MATERIAL WITHIN THREE (3) BUSINESS DAYS UNLESS AN EXTENSION IS APPROVED IN WRITING BY THE LLMD MANAGER.
- AT NO TIME SHALL ANY CONTRACTOR STORE OR PLACE EQUIPMENT, SIGNS, TEMPORARY UTILITIES OR ANY OTHER ITEMS WITHIN THE PUBLIC RIGHT OF WAY OR LLMD LANDSCAPE EASEMENT AREAS.
- NO CONTRACTOR PARKING WILL BE ALLOWED ON THE MJPA STREETS AT ANY TIME DURING CONSTRUCTION.
- NO CONSTRUCTION PERSONNEL OR SUBCONTRACTORS MAY CONDUCT THEIR BREAK TIME IN THE LLMD AREA. COST FOR DAMAGES WILL APPLY AS PER COA 69.
- NO CERTIFICATE OF OCCUPANCY WILL BE ISSUED UNTIL ALL LLMD IRRIGATION AND/OR PLANTINGS ARE RESTORED IN-KIND AND TO THE SATISFACTION OF THE MJPA OPERATIONS DIRECTOR AND ANY OUTSTANDING FINES ARE PAID IN FULL.
- PRIOR TO ANY WALL AND FENCE CONSTRUCTION OR ENCROACHMENT INTO THE LLMD THE MJPA MUST BE NOTIFIED FOR LLMD PRE-INSPECTION AND SCHEDULE OF WORK.

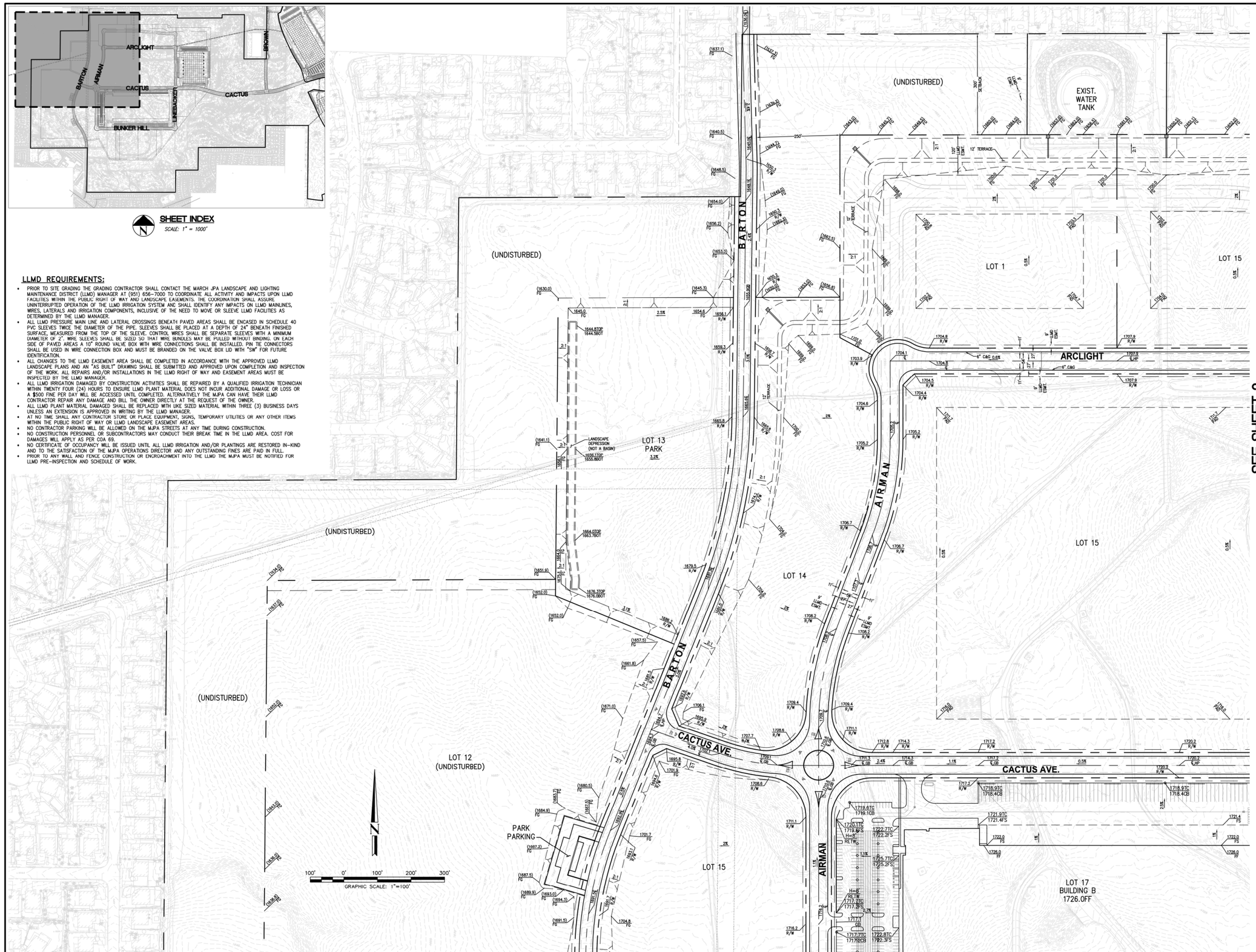

160 S. Old Springs Road
Suite 210
Anaheim Hills, CA 92808
714-685-6860
DRC Engineering, Inc.
Civil Engineering/Land Surveying/Land Planning

NOT FOR CONSTRUCTION

NO.:	REVISION:	DATE:

PROJECT: **MERIDIAN - UPPER PLATEAU**

COUNTY OF RIVERSIDE, CALIFORNIA

DRAWING NAME: **CONCEPTUAL GRADING**

ISSUE: CONCEPTUAL
DATE: 2021-10-18
CHECKED: CM DRAWN: HM
DRAWING FILE:
PROJECT NO.: **20-780**
SHEET NUMBER: **1**
OF 4 SHEETS
SCALE: **AS SHOWN**

SEE SHEET 1

(UNDISTURBED)

LOT 12
(UNDISTURBED)

PARK
PARKING

BARTON

LOT 15

AIRMAN

LOT 17
BUILDING B
1726.0FF

LANDSCAPE
DEPRESSION
(NOT A BASIN)

BUNKER HILL

LOT 18

(UNDISTURBED)

LOT 15

LOT 11
1727.0 PAD

LOT 18

(UNDISTURBED)

(UNDISTURBED)

SEE SHEET 4

100' 0' 100' 200' 300'
GRAPHIC SCALE: 1"=100'

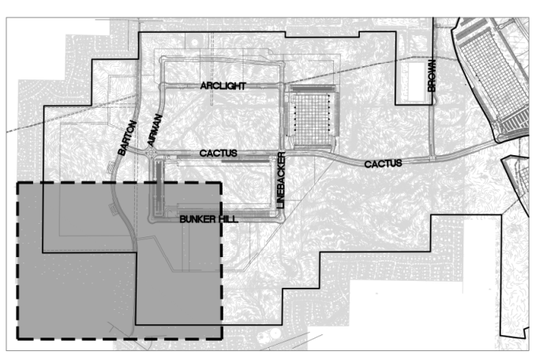

SHEET INDEX
SCALE: 1" = 1000'

160 S. Old Springs Road
Suite 210
Anaheim Hills, CA 92808
714-685-6860
DRC Engineering, Inc.
Civil Engineering/Land Surveying/Land Planning

NOT FOR CONSTRUCTION

NO.:	REVISION:	DATE:

PROJECT: MERIDIAN - UPPER PLATEAU
COUNTY OF RIVERSIDE, CALIFORNIA

DRAWING NAME: CONCEPTUAL GRADING

ISSUE: CONCEPTUAL
DATE: 2021-10-18
CHECKED: CM DRAWN: HM
DRAWING FILE:
PROJECT NO.: 20-750
SHEET NUMBER: 2 OF 4 SHEETS
SCALE: AS SHOWN

FILENAME: M:\20020\20-750 Meridian Upper Plateau\CV\Overall\20750CG.dwg LAST SAVED ON: Oct 18 2021 5:31pm PLOTTED BY: HOWER, Dev Oct 18 2021 5:31pm CFC

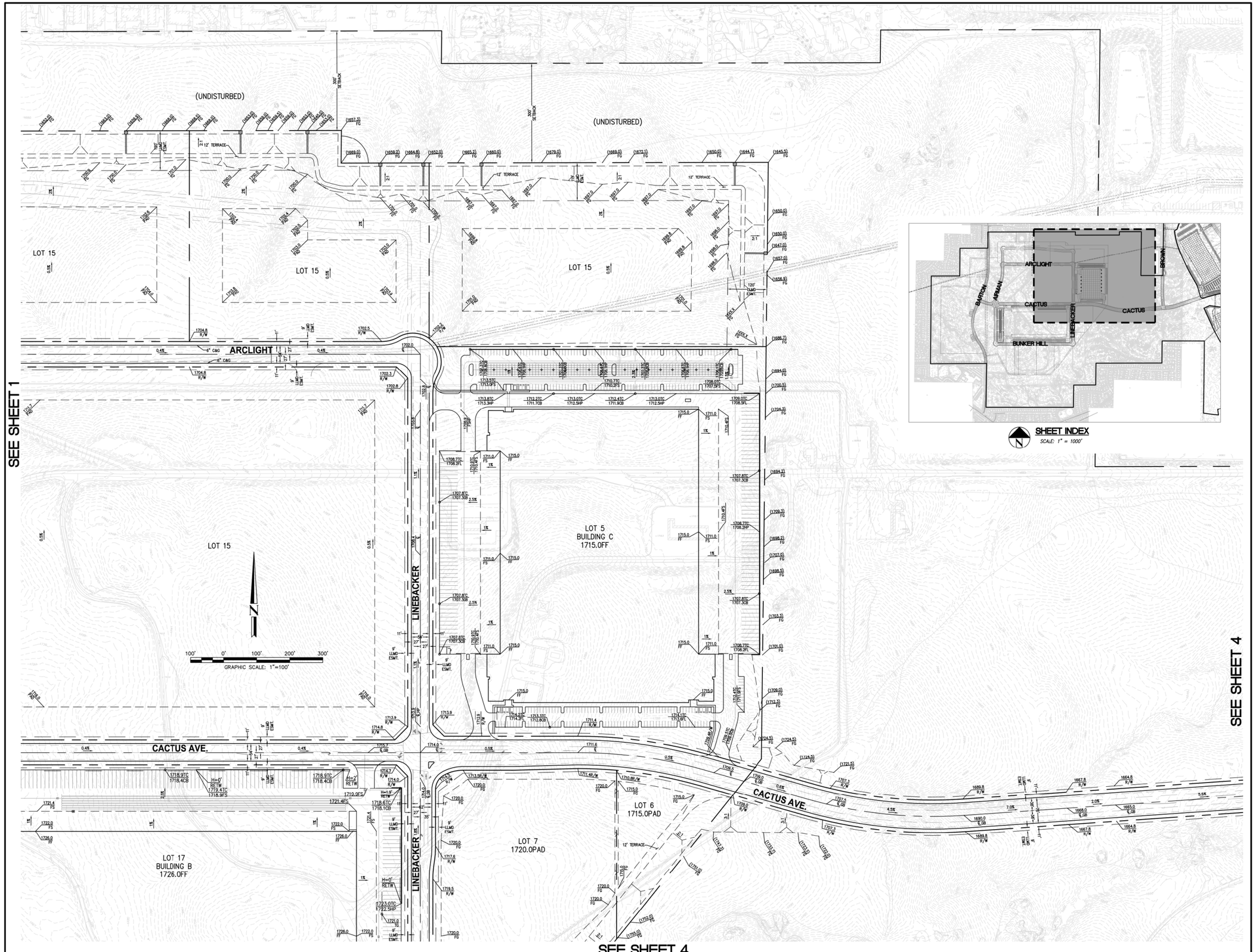

160 S. Old Springs Road
Suite 210
Anaheim Hills, CA 92808
714-685-6860

DRC Engineering, Inc.
Civil Engineering/Land Surveying/Land Planning

NOT FOR CONSTRUCTION

NO.:	REVISION:	DATE:

PROJECT: **MERIDIAN - UPPER PLATEAU**

COUNTY OF RIVERSIDE, CALIFORNIA

DRAWING NAME: **CONCEPTUAL GRADING**

ISSUE:	CONCEPTUAL
DATE:	2021-10-18
CHECKED: CM	DRAWN: HM
DRAWING FILE:	
PROJECT NO.:	20-750
SHEET NUMBER:	3
OF	4 SHEETS
SCALE:	AS SHOWN

FILENAME: M:\2020\20-750 Meridian\dwg\ Partners\CD\Overall\20750CG-.dwg LAST SAVED ON: Oct 18 2021 5:35pm PLOTTED BY: HOMER, Oct 18 2021 5:35pm, CFC

SEE SHEET 3

SEE SHEET 2

LOT 17
BUILDING B
1726.0FF

LOT 7
1720.0PAD

LOT 8
1730.0PAD
1730.0 EL

LOT 9
1731.0 PAD

LOT 10
1729.0 PAD

LINEBACKER

BUNKER HILL

GRAPHIC SCALE: 1"=100'

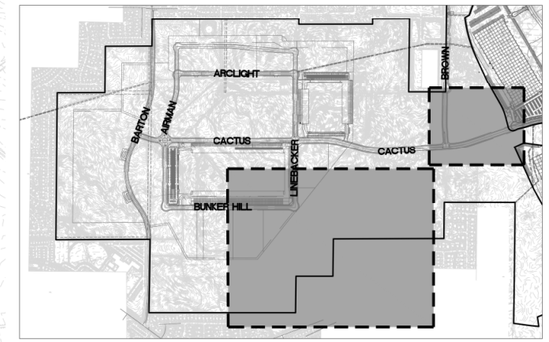

SHEET INDEX
SCALE: 1" = 1000'

SEE SHEET 3

BROWN AVE.

CACTUS AVE.

160 S. Old Springs Road
Suite 210
Anaheim Hills, CA 92808
714-685-6860

DRC Engineering, Inc.
Civil Engineering/Land Surveying/Land Planning

NOT FOR CONSTRUCTION

NO.:	REVISION:	DATE:

PROJECT:
MERIDIAN - UPPER PLATEAU
COUNTY OF RIVERSIDE, CALIFORNIA

DRAWING NAME:
CONCEPTUAL GRADING

ISSUE: CONCEPTUAL
DATE: 2021-10-18
CHECKED: CM DRAWN: HM
DRAWING FILE:
PROJECT NO.: 20-750
SHEET NUMBER:
4
OF 4 SHEETS
SCALE: AS SHOWN

FILENAME: M:\2020\20-750 Meridian Upper Plateau\CD\Overall\20750CG.dwg LAST SAVED ON: Oct 18 2021 5:21pm PLOTTED BY: HOMER, CM Oct 18 2021 5:31pm, DFC

Appendix 3: Soils Information

Geotechnical Study and Other Infiltration Testing Data

SOILS REPORT IS CURRENTLY BEING WRITTEN. WILL BE INCLUDED ONCE RECIEVED.

Appendix 4: Historical Site Conditions

Appendix 5: LID Infeasibility

N/A

Appendix 6: BMP Design Details

BMP Sizing, Design Details and other Supporting Documentation

Santa Ana Watershed - BMP Design Volume, V_{BMP}
(Rev. 10-2011)

Legend: Required Entries / Calculated Cells

*(Note this worksheet shall **only** be used in conjunction with BMP designs from the **LID BMP Design Handbook**)*

Company Name	DRC Engineering, Inc.	Date	9/14/2021
Designed by	Leonardo Ilog	Case No	
Company Project Number/Name	20-750 Master Meridian West Campus Upper Plateau		

BMP Identification

BMP NAME / ID: L1

Must match Name/ID used on BMP Design Calculation Sheet

Design Rainfall Depth

85th Percentile, 24-hour Rainfall Depth, from the Isohyetal Map in Handbook Appendix E

D_{85}= 0.60 inches

Drainage Management Area Tabulation

Insert additional rows if needed to accommodate all DMAs draining to the BMP

DMA Type/ID	DMA Area (square feet)	Post-Project Surface Type	Effective Imperivous Fraction, I_f	DMA Runoff Factor	DMA Areas x Runoff Factor	*Design Storm Depth (in)*	*Design Capture Volume, V_{BMP} (cubic feet)*	*Proposed Volume on Plans (cubic feet)*
L1	*413,114*	*Concrete or Asphalt*	*1*	*0.89*	*368498*			
L1	*103,279*	*Ornamental Landscaping*	*0.1*	*0.11*	*11407.9*			
	516393		***Total***		**379905.9**	**0.60**	***18995.3***	***71,200***

Notes:

Santa Ana Watershed - BMP Design Volume, V_{BMP}

(Rev. 10-2011)

Legend: Required Entries / Calculated Cells

*(Note this worksheet shall **only** be used in conjunction with BMP designs from the **LID BMP Design Handbook**)*

Company Name	DRC Engineering, Inc.	Date	9/14/2021
Designed by	Leonardo Ilog	Case No	
Company Project Number/Name	20-750 Master Meridian West Campus Upper Plateau		

BMP Identification

BMP NAME / ID: L2

Must match Name/ID used on BMP Design Calculation Sheet

Design Rainfall Depth

85th Percentile, 24-hour Rainfall Depth, from the Isohyetal Map in Handbook Appendix E

D_{85}= 0.60 inches

Drainage Management Area Tabulation

Insert additional rows if needed to accommodate all DMAs draining to the BMP

DMA Type/ID	DMA Area (square feet)	Post-Project Surface Type	Effective Imperivous Fraction, I_f	DMA Runoff Factor	DMA Areas x Runoff Factor	*Design Storm Depth (in)*	*Design Capture Volume, V_{BMP} (cubic feet)*	*Proposed Volume on Plans (cubic feet)*
L2	*391,298*	*Concrete or Asphalt*	*1*	*0.89*	*349038.2*			
L2	*97,825*	*Ornamental Landscaping*	*0.1*	*0.11*	*10805.5*			

Santa Ana Watershed - BMP Design Volume, V_{BMP}

(Rev. 10-2011)

Legend: Required Entries / Calculated Cells

*(Note this worksheet shall **only** be used in conjunction with BMP designs from the **LID BMP Design Handbook**)*

Company Name	DRC Engineering, Inc.	Date	9/14/2021
Designed by	Leonardo Ilog	Case No	
Company Project Number/Name	20-750 Master Meridian West Campus Upper Plateau		

BMP Identification

BMP NAME / ID: L3

Must match Name/ID used on BMP Design Calculation Sheet

Design Rainfall Depth

85th Percentile, 24-hour Rainfall Depth, from the Isohyetal Map in Handbook Appendix E

D_{85}= 0.60 inches

Drainage Management Area Tabulation

Insert additional rows if needed to accommodate all DMAs draining to the BMP

DMA Type/ID	DMA Area (square feet)	Post-Project Surface Type	Effective Imperivous Fraction, I_f	DMA Runoff Factor	DMA Areas x Runoff Factor	Design Storm Depth (in)	Design Capture Volume, V_{BMP} (cubic feet)	Proposed Volume on Plans (cubic feet)
L3	342,662	Concrete or Asphalt	1	0.89	305654.9			
L3	85,666	Ornamental Landscaping	0.1	0.11	9462.5			
	428328	Total			315117.4	0.60	15755.9	59,000

Notes:

Santa Ana Watershed - BMP Design Volume, V_{BMP}
(Rev. 10-2011)

Legend: Required Entries / Calculated Cells

*(Note this worksheet shall **only** be used in conjunction with BMP designs from the **LID BMP Design Handbook**)*

Company Name	DRC Engineering, Inc.	Date	9/14/2021
Designed by	Leonardo Ilog	Case No	
Company Project Number/Name	20-750 Master Meridian West Campus Upper Plateau		

BMP Identification

BMP NAME / ID: L4-1

Must match Name/ID used on BMP Design Calculation Sheet

Design Rainfall Depth

85th Percentile, 24-hour Rainfall Depth,
from the Isohyetal Map in Handbook Appendix E

D_{85}= 0.60 inches

Drainage Management Area Tabulation

Insert additional rows if needed to accommodate all DMAs draining to the BMP

DMA Type/ID	DMA Area (square feet)	Post-Project Surface Type	Effective Imperivous Fraction, I_f	DMA Runoff Factor	DMA Areas x Runoff Factor	*Design Storm Depth (in)*	*Design Capture Volume, V_{BMP} (cubic feet)*	*Proposed Volume on Plans (cubic feet)*
L4-1	*135,696*	*Concrete or Asphalt*	*1*	*0.89*	*121040.8*			
L4-1	*33,924*	*Ornamental Landscaping*	*0.1*	*0.11*	*3747.2*			

Santa Ana Watershed - BMP Design Volume, V_{BMP}

(Rev. 10-2011)

Legend: Required Entries / Calculated Cells

*(Note this worksheet shall **only** be used in conjunction with BMP designs from the **LID BMP Design Handbook**)*

Company Name	DRC Engineering, Inc.	Date	9/14/2021
Designed by	Leonardo Ilog	Case No	
Company Project Number/Name	20-750 Master Meridian West Campus Upper Plateau		

BMP Identification

BMP NAME / ID: L4-2

Must match Name/ID used on BMP Design Calculation Sheet

Design Rainfall Depth

85th Percentile, 24-hour Rainfall Depth, from the Isohyetal Map in Handbook Appendix E

D_{85}= 0.60 inches

Drainage Management Area Tabulation

Insert additional rows if needed to accommodate all DMAs draining to the BMP

DMA Type/ID	DMA Area (square feet)	Post-Project Surface Type	Effective Imperivous Fraction, I_f	DMA Runoff Factor	DMA Areas x Runoff Factor	*Design Storm Depth (in)*	*Design Capture Volume, V_{BMP} (cubic feet)*	*Proposed Volume on Plans (cubic feet)*
L4-2	*320,301*	*Concrete or Asphalt*	*1*	*0.89*	*285708.3*			
L4-2	*80,075*	*Ornamental Landscaping*	*0.1*	*0.11*	*8844.9*			
	400376		***Total***		**294553.2**	**0.60**	***14727.7***	***55,200***

Notes:

Santa Ana Watershed - BMP Design Volume, V_{BMP}
(Rev. 10-2011)

Legend: Required Entries / Calculated Cells

*(Note this worksheet shall **only** be used in conjunction with BMP designs from the **LID BMP Design Handbook**)*

Company Name	DRC Engineering, Inc.	Date	9/14/2021
Designed by	Leonardo Ilog	Case No	
Company Project Number/Name	20-750 Master Meridian West Campus Upper Plateau		

BMP Identification

BMP NAME / ID: L5

Must match Name/ID used on BMP Design Calculation Sheet

Design Rainfall Depth

85th Percentile, 24-hour Rainfall Depth, from the Isohyetal Map in Handbook Appendix E

D_{85}= 0.60 inches

Drainage Management Area Tabulation

Insert additional rows if needed to accommodate all DMAs draining to the BMP

DMA Type/ID	DMA Area (square feet)	Post-Project Surface Type	Effective Imperivous Fraction, I_f	DMA Runoff Factor	DMA Areas x Runoff Factor	*Design Storm Depth (in)*	*Design Capture Volume, V_{BMP} (cubic feet)*	*Proposed Volume on Plans (cubic feet)*
L5	*945,490*	*Concrete or Asphalt*	*1*	*0.89*	*843377.4*			
L5	*236,373*	*Ornamental Landscaping*	*0.1*	*0.11*	*26109.2*			
	1181863		***Total***		**869486.6**	**0.60**	***43474.3***	***162,800***

Notes:

Santa Ana Watershed - BMP Design Volume, V_{BMP}

(Rev. 10-2011)

Legend: Required Entries / Calculated Cells

*(Note this worksheet shall **only** be used in conjunction with BMP designs from the **LID BMP Design Handbook**)*

Company Name	DRC Engineering, Inc.	Date	9/14/2021
Designed by	Leonardo Ilog	Case No	
Company Project Number/Name	20-750 Master Meridian West Campus Upper Plateau		

BMP Identification

BMP NAME / ID: L6

Must match Name/ID used on BMP Design Calculation Sheet

Design Rainfall Depth

85th Percentile, 24-hour Rainfall Depth, from the Isohyetal Map in Handbook Appendix E

D_{85}= 0.60 inches

Drainage Management Area Tabulation

Insert additional rows if needed to accommodate all DMAs draining to the BMP

DMA Type/ID	DMA Area (square feet)	Post-Project Surface Type	Effective Imperivous Fraction, I_f	DMA Runoff Factor	DMA Areas x Runoff Factor	*Design Storm Depth (in)*	*Design Capture Volume, V_{BMP} (cubic feet)*	*Proposed Volume on Plans (cubic feet)*
L6	*71,224*	*Concrete or Asphalt*	*1*	*0.89*	*63531.8*			
L6	*17,806*	*Ornamental Landscaping*	*0.1*	*0.11*	*1966.8*			
	89030		***Total***		**65498.6**	**0.60**	***3274.9***	***12,300***

Notes:

Santa Ana Watershed - BMP Design Volume, V_{BMP}

(Rev. 10-2011)

Legend: Required Entries / Calculated Cells

*(Note this worksheet shall **only** be used in conjunction with BMP designs from the **LID BMP Design Handbook**)*

Company Name	DRC Engineering, Inc.	Date	9/14/2021
Designed by	Leonardo Ilog	Case No	
Company Project Number/Name	20-750 Master Meridian West Campus Upper Plateau		

BMP Identification

BMP NAME / ID: L7

Must match Name/ID used on BMP Design Calculation Sheet

Design Rainfall Depth

85th Percentile, 24-hour Rainfall Depth, from the Isohyetal Map in Handbook Appendix E

D_{85}= 0.60 inches

Drainage Management Area Tabulation

Insert additional rows if needed to accommodate all DMAs draining to the BMP

DMA Type/ID	DMA Area (square feet)	Post-Project Surface Type	Effective Imperivous Fraction, I_f	DMA Runoff Factor	DMA Areas x Runoff Factor	*Design Storm Depth (in)*	*Design Capture Volume, V_{BMP} (cubic feet)*	*Proposed Volume on Plans (cubic feet)*
L7	*318,109*	*Concrete or Asphalt*	*1*	*0.89*	*283753*			
L7	*79,527*	*Ornamental Landscaping*	*0.1*	*0.11*	*8784.4*			

Santa Ana Watershed - BMP Design Volume, V_{BMP}

(Rev. 10-2011)

Legend: Required Entries / Calculated Cells

*(Note this worksheet shall **only** be used in conjunction with BMP designs from the **LID BMP Design Handbook**)*

Company Name	DRC Engineering, Inc.	Date	9/14/2021
Designed by	Leonardo Ilog	Case No	
Company Project Number/Name	20-750 Master Meridian West Campus Upper Plateau		

BMP Identification

BMP NAME / ID: L8

Must match Name/ID used on BMP Design Calculation Sheet

Design Rainfall Depth

85th Percentile, 24-hour Rainfall Depth, from the Isohyetal Map in Handbook Appendix E

D_{85}= 0.60 inches

Drainage Management Area Tabulation

Insert additional rows if needed to accommodate all DMAs draining to the BMP

DMA Type/ID	DMA Area (square feet)	Post-Project Surface Type	Effective Imperivous Fraction, I_f	DMA Runoff Factor	DMA Areas x Runoff Factor	*Design Storm Depth (in)*	*Design Capture Volume, V_{BMP} (cubic feet)*	*Proposed Volume on Plans (cubic feet)*
L8	*46,330*	*Concrete or Asphalt*	*1*	*0.89*	*41326.7*			
L8	*11,583*	*Ornamental Landscaping*	*0.1*	*0.11*	*1279.4*			
	57913		***Total***		**42606.1**	**0.60**	***2130.3***	***8,000***

Notes:

Santa Ana Watershed - BMP Design Volume, V_{BMP}

(Rev. 10-2011)

Legend: Required Entries / Calculated Cells

*(Note this worksheet shall **only** be used in conjunction with BMP designs from the **LID BMP Design Handbook**)*

Company Name	DRC Engineering, Inc.	Date	9/14/2021
Designed by	Leonardo Ilog	Case No	
Company Project Number/Name	20-750 Master Meridian West Campus Upper Plateau		

BMP Identification

BMP NAME / ID: L9

Must match Name/ID used on BMP Design Calculation Sheet

Design Rainfall Depth

85th Percentile, 24-hour Rainfall Depth, from the Isohyetal Map in Handbook Appendix E

D_{85}= 0.60 inches

Drainage Management Area Tabulation

Insert additional rows if needed to accommodate all DMAs draining to the BMP

DMA Type/ID	DMA Area (square feet)	Post-Project Surface Type	Effective Imperivous Fraction, I_f	DMA Runoff Factor	DMA Areas x Runoff Factor	*Design Storm Depth (in)*	*Design Capture Volume, V_{BMP} (cubic feet)*	*Proposed Volume on Plans (cubic feet)*
L9	*185,254*	*Concrete or Asphalt*	*1*	*0.89*	*165246.2*			
L9	*46,313*	*Ornamental Landscaping*	*0.1*	*0.11*	*5115.7*			

Santa Ana Watershed - BMP Design Volume, V_{BMP}

(Rev. 10-2011)

Legend: Required Entries / Calculated Cells

*(Note this worksheet shall **only** be used in conjunction with BMP designs from the **LID BMP Design Handbook**)*

Company Name	DRC Engineering, Inc.	Date	9/14/2021
Designed by	Leonardo Ilog	Case No	
Company Project Number/Name	20-750 Master Meridian West Campus Upper Plateau		

BMP Identification

BMP NAME / ID: L10

Must match Name/ID used on BMP Design Calculation Sheet

Design Rainfall Depth

85th Percentile, 24-hour Rainfall Depth, from the Isohyetal Map in Handbook Appendix E

D_{85}= 0.60 inches

Drainage Management Area Tabulation

Insert additional rows if needed to accommodate all DMAs draining to the BMP

DMA Type/ID	DMA Area (square feet)	Post-Project Surface Type	Effective Imperivous Fraction, I_f	DMA Runoff Factor	DMA Areas x Runoff Factor	Design Storm Depth (in)	Design Capture Volume, V_{BMP} (cubic feet)	Proposed Volume on Plans (cubic feet)
L10	385,064	Concrete or Asphalt	1	0.89	343477.1			
L10	96,266	Ornamental Landscaping	0.1	0.11	10633.3			
	481330	Total			354110.4	0.60	17705.5	66,300

Notes:

Santa Ana Watershed - BMP Design Volume, V_{BMP}
(Rev. 10-2011)

Legend: Required Entries / Calculated Cells

*(Note this worksheet shall **only** be used in conjunction with BMP designs from the **LID BMP Design Handbook**)*

Company Name	DRC Engineering, Inc.	Date	9/14/2021
Designed by	Leonardo Ilog	Case No	
Company Project Number/Name	20-750 Master Meridian West Campus Upper Plateau		

BMP Identification

BMP NAME / ID: L11

Must match Name/ID used on BMP Design Calculation Sheet

Design Rainfall Depth

85th Percentile, 24-hour Rainfall Depth,
from the Isohyetal Map in Handbook Appendix E

D_{85}= 0.60 inches

Drainage Management Area Tabulation

Insert additional rows if needed to accommodate all DMAs draining to the BMP

DMA Type/ID	DMA Area (square feet)	Post-Project Surface Type	Effective Imperivous Fraction, I_f	DMA Runoff Factor	DMA Areas x Runoff Factor	*Design Storm Depth (in)*	*Design Capture Volume, V_{BMP} (cubic feet)*	*Proposed Volume on Plans (cubic feet)*
L11	*390,119*	*Concrete or Asphalt*	*1*	*0.89*	*347986.3*			
L11	*97,530*	*Ornamental Landscaping*	*0.1*	*0.11*	*10772.9*			
	487649		***Total***		**358759.2**	**0.60**	***17938***	***67,200***

Notes:

Santa Ana Watershed - BMP Design Volume, V_{BMP}

(Rev. 10-2011)

Legend: Required Entries / Calculated Cells

*(Note this worksheet shall **only** be used in conjunction with BMP designs from the **LID BMP Design Handbook**)*

Company Name	DRC Engineering, Inc.	Date	9/14/2021
Designed by	Leonardo Ilog	Case No	
Company Project Number/Name	20-750 Master Meridian West Campus Upper Plateau		

BMP Identification

BMP NAME / ID: L12 (PARK)

Must match Name/ID used on BMP Design Calculation Sheet

Design Rainfall Depth

85th Percentile, 24-hour Rainfall Depth, from the Isohyetal Map in Handbook Appendix E

D_{85}= 0.60 inches

Drainage Management Area Tabulation

Insert additional rows if needed to accommodate all DMAs draining to the BMP

DMA Type/ID	DMA Area (square feet)	Post-Project Surface Type	Effective Imperivous Fraction, I_f	DMA Runoff Factor	DMA Areas x Runoff Factor	*Design Storm Depth (in)*	*Design Capture Volume, V_{BMP} (cubic feet)*	*Proposed Volume on Plans (cubic feet)*
L12 (PARK)	*1,920,664*	*Ornamental Landscaping*	*0.1*	*0.11*	*212152.7*			
L12 (PARK)	*213,407*	*Concrete or Asphalt*	*1*	*0.89*	*190359.1*			
	2134071	***Total***			**402511.8**	**0.60**	***20125.6***	***294,000***

Notes:

Santa Ana Watershed - BMP Design Volume, V_{BMP}

(Rev. 10-2011)

Legend: Required Entries / Calculated Cells

*(Note this worksheet shall **only** be used in conjunction with BMP designs from the **LID BMP Design Handbook**)*

Company Name	DRC Engineering, Inc.	Date	9/14/2021
Designed by	Leonardo Ilog	Case No	
Company Project Number/Name	20-750 Master Meridian West Campus Upper Plateau		

BMP Identification

BMP NAME / ID: L13

Must match Name/ID used on BMP Design Calculation Sheet

Design Rainfall Depth

85th Percentile, 24-hour Rainfall Depth, from the Isohyetal Map in Handbook Appendix E

D_{85}= 0.60 inches

Drainage Management Area Tabulation

Insert additional rows if needed to accommodate all DMAs draining to the BMP

DMA Type/ID	DMA Area (square feet)	Post-Project Surface Type	Effective Imperivous Fraction, I_f	DMA Runoff Factor	DMA Areas x Runoff Factor	*Design Storm Depth (in)*	*Design Capture Volume, V_{BMP} (cubic feet)*	*Proposed Volume on Plans (cubic feet)*
L13	*371,336*	*Concrete or Asphalt*	*1*	*0.89*	*331231.7*			
L13	*92,834*	*Ornamental Landscaping*	*0.1*	*0.11*	*10254.3*			

Santa Ana Watershed - BMP Design Volume, V_{BMP}
(Rev. 10-2011)

Legend: Required Entries / Calculated Cells

*(Note this worksheet shall **only** be used in conjunction with BMP designs from the **LID BMP Design Handbook**)*

Company Name	DRC Engineering, Inc.	Date	9/14/2021
Designed by	Leonardo Ilog	Case No	
Company Project Number/Name	20-750 Master Meridian West Campus Upper Plateau		

BMP Identification

BMP NAME / ID: L14-1

Must match Name/ID used on BMP Design Calculation Sheet

Design Rainfall Depth

85th Percentile, 24-hour Rainfall Depth, from the Isohyetal Map in Handbook Appendix E

D_{85}= 0.60 inches

Drainage Management Area Tabulation

Insert additional rows if needed to accommodate all DMAs draining to the BMP

DMA Type/ID	DMA Area (square feet)	Post-Project Surface Type	Effective Imperivous Fraction, I_f	DMA Runoff Factor	DMA Areas x Runoff Factor	*Design Storm Depth (in)*	*Design Capture Volume, V_{BMP} (cubic feet)*	*Proposed Volume on Plans (cubic feet)*
L14-1	*171,553*	*Concrete or Asphalt*	*1*	*0.89*	*153025.1*			
L14-1	*42,888*	*Ornamental Landscaping*	*0.1*	*0.11*	*4737.3*			
	214441		***Total***		**157762.4**	**0.60**	***7888.1***	***29,600***

Notes:

Santa Ana Watershed - BMP Design Volume, V_{BMP}

(Rev. 10-2011)

Legend: Required Entries / Calculated Cells

*(Note this worksheet shall **only** be used in conjunction with BMP designs from the **LID BMP Design Handbook**)*

Company Name	DRC Engineering, Inc.	Date	9/14/2021
Designed by	Leonardo Ilog	Case No	
Company Project Number/Name	20-750 Master Meridian West Campus Upper Plateau		

BMP Identification

BMP NAME / ID: L14-2

Must match Name/ID used on BMP Design Calculation Sheet

Design Rainfall Depth

85th Percentile, 24-hour Rainfall Depth, from the Isohyetal Map in Handbook Appendix E

D_{85}= 0.60 inches

Drainage Management Area Tabulation

Insert additional rows if needed to accommodate all DMAs draining to the BMP

DMA Type/ID	DMA Area (square feet)	Post-Project Surface Type	Effective Imperivous Fraction, I_f	DMA Runoff Factor	DMA Areas x Runoff Factor	*Design Storm Depth (in)*	*Design Capture Volume, V_{BMP} (cubic feet)*	*Proposed Volume on Plans (cubic feet)*
L14-2	*181,400*	*Concrete or Asphalt*	*1*	*0.89*	*161808.8*			
L14-2	*45,350*	*Ornamental Landscaping*	*0.1*	*0.11*	*5009.3*			
	226750		***Total***		**166818.1**	**0.60**	***8340.9***	***31,300***

Notes:

Santa Ana Watershed - BMP Design Volume, V_{BMP}

(Rev. 10-2011)

Legend: Required Entries / Calculated Cells

*(Note this worksheet shall **only** be used in conjunction with BMP designs from the **LID BMP Design Handbook**)*

Company Name	DRC Engineering, Inc.	Date	9/14/2021
Designed by	Leonardo Ilog	Case No	
Company Project Number/Name	20-750 Master Meridian West Campus Upper Plateau		

BMP Identification

BMP NAME / ID: L15-1

Must match Name/ID used on BMP Design Calculation Sheet

Design Rainfall Depth

85th Percentile, 24-hour Rainfall Depth, from the Isohyetal Map in Handbook Appendix E

D_{85}= 0.60 inches

Drainage Management Area Tabulation

Insert additional rows if needed to accommodate all DMAs draining to the BMP

DMA Type/ID	DMA Area (square feet)	Post-Project Surface Type	Effective Imperivous Fraction, I_f	DMA Runoff Factor	DMA Areas x Runoff Factor	*Design Storm Depth (in)*	*Design Capture Volume, V_{BMP} (cubic feet)*	*Proposed Volume on Plans (cubic feet)*
L15-1	*252,116*	*Concrete or Asphalt*	*1*	*0.89*	*224887.5*			
L15-1	*63,029*	*Ornamental Landscaping*	*0.1*	*0.11*	*6962.1*			

Santa Ana Watershed - BMP Design Volume, V_{BMP}
(Rev. 10-2011)

Legend: Required Entries / Calculated Cells

*(Note this worksheet shall **only** be used in conjunction with BMP designs from the **LID BMP Design Handbook**)*

Company Name	DRC Engineering, Inc.	Date	9/14/2021
Designed by	Leonardo Ilog	Case No	
Company Project Number/Name	20-750 Master Meridian West Campus Upper Plateau		

BMP Identification

BMP NAME / ID: L15-2

Must match Name/ID used on BMP Design Calculation Sheet

Design Rainfall Depth

85th Percentile, 24-hour Rainfall Depth,
from the Isohyetal Map in Handbook Appendix E

D_{85}= 0.60 inches

Drainage Management Area Tabulation

Insert additional rows if needed to accommodate all DMAs draining to the BMP

DMA Type/ID	DMA Area (square feet)	Post-Project Surface Type	Effective Imperivous Fraction, I_f	DMA Runoff Factor	DMA Areas x Runoff Factor	*Design Storm Depth (in)*	*Design Capture Volume, V_{BMP} (cubic feet)*	*Proposed Volume on Plans (cubic feet)*
L15-2	*266,783*	*Concrete or Asphalt*	*1*	*0.89*	*237970.6*			
L15-2	*66,696*	*Ornamental Landscaping*	*0.1*	*0.11*	*7367.1*			
	333479		***Total***		**245337.7**	**0.60**	***12266.9***	***46,000***

Notes:

Santa Ana Watershed - BMP Design Volume, V_{BMP}

(Rev. 10-2011)

Legend: Required Entries / Calculated Cells

*(Note this worksheet shall **only** be used in conjunction with BMP designs from the **LID BMP Design Handbook**)*

Company Name	DRC Engineering, Inc.	Date	9/14/2021
Designed by	Leonardo Ilog	Case No	
Company Project Number/Name	20-750 Master Meridian West Campus Upper Plateau		

BMP Identification

BMP NAME / ID: L15-3

Must match Name/ID used on BMP Design Calculation Sheet

Design Rainfall Depth

85th Percentile, 24-hour Rainfall Depth, from the Isohyetal Map in Handbook Appendix E

D_{85}= 0.60 inches

Drainage Management Area Tabulation

Insert additional rows if needed to accommodate all DMAs draining to the BMP

DMA Type/ID	DMA Area (square feet)	Post-Project Surface Type	Effective Imperivous Fraction, I_f	DMA Runoff Factor	DMA Areas x Runoff Factor	*Design Storm Depth (in)*	*Design Capture Volume, V_{BMP} (cubic feet)*	*Proposed Volume on Plans (cubic feet)*
L15-3	*379,334*	*Concrete or Asphalt*	*1*	*0.89*	*338365.6*			
L15-3	*94,833*	*Ornamental Landscaping*	*0.1*	*0.11*	*10475.1*			

Santa Ana Watershed - BMP Design Volume, V_{BMP}
(Rev. 10-2011)

Legend: Required Entries / Calculated Cells

*(Note this worksheet shall **only** be used in conjunction with BMP designs from the **LID BMP Design Handbook**)*

Company Name	DRC Engineering, Inc.	Date	9/14/2021
Designed by	Leonardo Ilog	Case No	
Company Project Number/Name	20-750 Master Meridian West Campus Upper Plateau		

BMP Identification

BMP NAME / ID: L16-1

Must match Name/ID used on BMP Design Calculation Sheet

Design Rainfall Depth

85th Percentile, 24-hour Rainfall Depth,
from the Isohyetal Map in Handbook Appendix E

D_{85}= 0.60 inches

Drainage Management Area Tabulation

Insert additional rows if needed to accommodate all DMAs draining to the BMP

DMA Type/ID	DMA Area (square feet)	Post-Project Surface Type	Effective Imperivous Fraction, I_f	DMA Runoff Factor	DMA Areas x Runoff Factor	*Design Storm Depth (in)*	*Design Capture Volume, V_{BMP} (cubic feet)*	*Proposed Volume on Plans (cubic feet)*
L16-1	*800,251*	*Concrete or Asphalt*	*1*	*0.89*	*713824.1*			
L16-1	*200,063*	*Ornamental Landscaping*	*0.1*	*0.11*	*22098.5*			
	1000314		***Total***		**735922.6**	**0.60**	***36796.1***	***137,800***

Notes:

Santa Ana Watershed - BMP Design Volume, V_{BMP}

(Rev. 10-2011)

Legend: Required Entries / Calculated Cells

*(Note this worksheet shall **only** be used in conjunction with BMP designs from the **LID BMP Design Handbook**)*

Company Name	DRC Engineering, Inc.	Date	9/14/2021
Designed by	Leonardo Ilog	Case No	
Company Project Number/Name	20-750 Master Meridian West Campus Upper Plateau		

BMP Identification

BMP NAME / ID: L16-2

Must match Name/ID used on BMP Design Calculation Sheet

Design Rainfall Depth

85th Percentile, 24-hour Rainfall Depth, from the Isohyetal Map in Handbook Appendix E

D_{85}= 0.60 inches

Drainage Management Area Tabulation

Insert additional rows if needed to accommodate all DMAs draining to the BMP

DMA Type/ID	DMA Area (square feet)	Post-Project Surface Type	Effective Imperivous Fraction, I_f	DMA Runoff Factor	DMA Areas x Runoff Factor	*Design Storm Depth (in)*	*Design Capture Volume, V_{BMP} (cubic feet)*	*Proposed Volume on Plans (cubic feet)*
L16-2	*1,111,781*	*Concrete or Asphalt*	*1*	*0.89*	*991708.5*			
L16-2	*277,945*	*Ornamental Landscaping*	*0.1*	*0.11*	*30701.3*			
	1389726		***Total***		**1022409.8**	**0.60**	***51120.5***	***191,500***

Notes:

Santa Ana Watershed - BMP Design Volume, V_{BMP}

(Rev. 10-2011)

Legend: Required Entries / Calculated Cells

*(Note this worksheet shall **only** be used in conjunction with BMP designs from the **LID BMP Design Handbook**)*

Company Name	DRC Engineering, Inc.	Date	9/14/2021
Designed by	Leonardo Ilog	Case No	
Company Project Number/Name	20-750 Master Meridian West Campus Upper Plateau		

BMP Identification

BMP NAME / ID: L17

Must match Name/ID used on BMP Design Calculation Sheet

Design Rainfall Depth

85th Percentile, 24-hour Rainfall Depth, from the Isohyetal Map in Handbook Appendix E

D_{85}= 0.60 inches

Drainage Management Area Tabulation

Insert additional rows if needed to accommodate all DMAs draining to the BMP

DMA Type/ID	DMA Area (square feet)	Post-Project Surface Type	Effective Imperivous Fraction, I_f	DMA Runoff Factor	DMA Areas x Runoff Factor	*Design Storm Depth (in)*	*Design Capture Volume, V_{BMP} (cubic feet)*	*Proposed Volume on Plans (cubic feet)*
L17	*2,026,984*	*Concrete or Asphalt*	*1*	*0.89*	*1808069.7*			
L17	*506,746*	*Ornamental Landscaping*	*0.1*	*0.11*	*55974.1*			
	2533730		***Total***		**1864043.8**	**0.60**	***93202.2***	***349,000***

Notes:

Santa Ana Watershed - BMP Design Volume, V_{BMP}

(Rev. 10-2011)

Legend: Required Entries / Calculated Cells

*(Note this worksheet shall **only** be used in conjunction with BMP designs from the **LID BMP Design Handbook**)*

Company Name	DRC Engineering, Inc.	Date	9/14/2021
Designed by	Leonardo Ilog	Case No	
Company Project Number/Name	20-750 Master Meridian West Campus Upper Plateau		

BMP Identification

BMP NAME / ID: 2-1D

Must match Name/ID used on BMP Design Calculation Sheet

Design Rainfall Depth

85th Percentile, 24-hour Rainfall Depth, from the Isohyetal Map in Handbook Appendix E

D_{85}= 0.60 inches

Drainage Management Area Tabulation

Insert additional rows if needed to accommodate all DMAs draining to the BMP

DMA Type/ID	DMA Area (square feet)	Post-Project Surface Type	Effective Imperivous Fraction, I_f	DMA Runoff Factor	DMA Areas x Runoff Factor	*Design Storm Depth (in)*	*Design Capture Volume, V_{BMP} (cubic feet)*	*Proposed Volume on Plans (cubic feet)*
2-1D	*37,427*	*Concrete or Asphalt*	*1*	*0.89*	*33384.9*			

Santa Ana Watershed - BMP Design Volume, V_{BMP}

(Rev. 10-2011)

Legend: Required Entries / Calculated Cells

*(Note this worksheet shall **only** be used in conjunction with BMP designs from the **LID BMP Design Handbook**)*

Company Name	DRC Engineering, Inc.	Date	9/14/2021
Designed by	Leonardo Ilog	Case No	
Company Project Number/Name	20-750 Master Meridian West Campus Upper Plateau		

BMP Identification

BMP NAME / ID: 2-2D

Must match Name/ID used on BMP Design Calculation Sheet

Design Rainfall Depth

85th Percentile, 24-hour Rainfall Depth, from the Isohyetal Map in Handbook Appendix E

D_{85}= 0.60 inches

Drainage Management Area Tabulation

Insert additional rows if needed to accommodate all DMAs draining to the BMP

DMA Type/ID	DMA Area (square feet)	Post-Project Surface Type	Effective Imperivous Fraction, I_f	DMA Runoff Factor	DMA Areas x Runoff Factor	*Design Storm Depth (in)*	*Design Capture Volume, V_{BMP} (cubic feet)*	*Proposed Volume on Plans (cubic feet)*
2-2D	*42,626*	*Concrete or Asphalt*	*1*	*0.89*	*38022.4*			

Santa Ana Watershed - BMP Design Volume, V_{BMP}

(Rev. 10-2011)

Legend: Required Entries / Calculated Cells

*(Note this worksheet shall **only** be used in conjunction with BMP designs from the **LID BMP Design Handbook**)*

Company Name	DRC Engineering, Inc.	Date	9/14/2021
Designed by	Leonardo Ilog	Case No	
Company Project Number/Name	20-750 Master Meridian West Campus Upper Plateau		

BMP Identification

BMP NAME / ID: 2-3D

Must match Name/ID used on BMP Design Calculation Sheet

Design Rainfall Depth

85th Percentile, 24-hour Rainfall Depth, from the Isohyetal Map in Handbook Appendix E

D_{85}= 0.60 inches

Drainage Management Area Tabulation

Insert additional rows if needed to accommodate all DMAs draining to the BMP

DMA Type/ID	DMA Area (square feet)	Post-Project Surface Type	Effective Imperivous Fraction, I_f	DMA Runoff Factor	DMA Areas x Runoff Factor	*Design Storm Depth (in)*	*Design Capture Volume, V_{BMP} (cubic feet)*	*Proposed Volume on Plans (cubic feet)*
2-3D	*42,626*	*Concrete or Asphalt*	*1*	*0.89*	*38022.4*			

Santa Ana Watershed - BMP Design Volume, V_{BMP}

(Rev. 10-2011)

Legend: Required Entries / Calculated Cells

*(Note this worksheet shall **only** be used in conjunction with BMP designs from the **LID BMP Design Handbook**)*

Company Name	DRC Engineering, Inc.	Date	9/14/2021
Designed by	Leonardo Ilog	Case No	
Company Project Number/Name	20-750 Master Meridian West Campus Upper Plateau		

BMP Identification

BMP NAME / ID: 2-4D

Must match Name/ID used on BMP Design Calculation Sheet

Design Rainfall Depth

85th Percentile, 24-hour Rainfall Depth, from the Isohyetal Map in Handbook Appendix E

D_{85}= 0.60 inches

Drainage Management Area Tabulation

Insert additional rows if needed to accommodate all DMAs draining to the BMP

DMA Type/ID	DMA Area (square feet)	Post-Project Surface Type	Effective Imperivous Fraction, I_f	DMA Runoff Factor	DMA Areas x Runoff Factor	*Design Storm Depth (in)*	*Design Capture Volume, V_{BMP} (cubic feet)*	*Proposed Volume on Plans (cubic feet)*
2-4D	*76,631*	*Concrete or Asphalt*	*1*	*0.89*	*68354.9*			

Santa Ana Watershed - BMP Design Volume, V_{BMP}

(Rev. 10-2011)

Legend: Required Entries / Calculated Cells

*(Note this worksheet shall **only** be used in conjunction with BMP designs from the **LID BMP Design Handbook**)*

Company Name	DRC Engineering, Inc.	Date	9/14/2021
Designed by	Leonardo Ilog	Case No	
Company Project Number/Name	20-750 Master Meridian West Campus Upper Plateau		

BMP Identification

BMP NAME / ID: 2-5D

Must match Name/ID used on BMP Design Calculation Sheet

Design Rainfall Depth

85th Percentile, 24-hour Rainfall Depth, from the Isohyetal Map in Handbook Appendix E

D_{85}= 0.60 inches

Drainage Management Area Tabulation

Insert additional rows if needed to accommodate all DMAs draining to the BMP

DMA Type/ID	DMA Area (square feet)	Post-Project Surface Type	Effective Imperivous Fraction, I_f	DMA Runoff Factor	DMA Areas x Runoff Factor	*Design Storm Depth (in)*	*Design Capture Volume, V_{BMP} (cubic feet)*	*Proposed Volume on Plans (cubic feet)*
2-5D	*40,605*	*Concrete or Asphalt*	*1*	*0.89*	*36219.7*			

Santa Ana Watershed - BMP Design Volume, V_{BMP}

(Rev. 10-2011)

Legend: Required Entries / Calculated Cells

*(Note this worksheet shall **only** be used in conjunction with BMP designs from the **LID BMP Design Handbook**)*

Company Name	DRC Engineering, Inc.	Date	9/14/2021
Designed by	Leonardo Ilog	Case No	
Company Project Number/Name	20-750 Master Meridian West Campus Upper Plateau		

BMP Identification

BMP NAME / ID: 2-6D

Must match Name/ID used on BMP Design Calculation Sheet

Design Rainfall Depth

85th Percentile, 24-hour Rainfall Depth, from the Isohyetal Map in Handbook Appendix E

D_{85}= 0.60 inches

Drainage Management Area Tabulation

Insert additional rows if needed to accommodate all DMAs draining to the BMP

DMA Type/ID	DMA Area (square feet)	Post-Project Surface Type	Effective Imperivous Fraction, I_f	DMA Runoff Factor	DMA Areas x Runoff Factor	*Design Storm Depth (in)*	*Design Capture Volume, V_{BMP} (cubic feet)*	*Proposed Volume on Plans (cubic feet)*
2-6D	*45,544*	*Concrete or Asphalt*	*1*	*0.89*	*40625.2*			

Santa Ana Watershed - BMP Design Volume, V_{BMP}

(Rev. 10-2011)

Legend: Required Entries / Calculated Cells

*(Note this worksheet shall **only** be used in conjunction with BMP designs from the **LID BMP Design Handbook**)*

Company Name	DRC Engineering, Inc.	Date	9/14/2021
Designed by	Leonardo Ilog	Case No	
Company Project Number/Name	20-750 Master Meridian West Campus Upper Plateau		

BMP Identification

BMP NAME / ID: 2-7D

Must match Name/ID used on BMP Design Calculation Sheet

Design Rainfall Depth

85th Percentile, 24-hour Rainfall Depth, from the Isohyetal Map in Handbook Appendix E

D_{85}= 0.60 inches

Drainage Management Area Tabulation

Insert additional rows if needed to accommodate all DMAs draining to the BMP

DMA Type/ID	DMA Area (square feet)	Post-Project Surface Type	Effective Imperivous Fraction, I_f	DMA Runoff Factor	DMA Areas x Runoff Factor	*Design Storm Depth (in)*	*Design Capture Volume, V_{BMP} (cubic feet)*	*Proposed Volume on Plans (cubic feet)*
2-7D	*32,198*	*Concrete or Asphalt*	*1*	*0.89*	*28720.6*			

Santa Ana Watershed - BMP Design Volume, V_{BMP}

(Rev. 10-2011)

Legend: Required Entries / Calculated Cells

*(Note this worksheet shall **only** be used in conjunction with BMP designs from the **LID BMP Design Handbook**)*

Company Name	DRC Engineering, Inc.	Date	9/14/2021
Designed by	Leonardo Ilog	Case No	
Company Project Number/Name	20-750 Master Meridian West Campus Upper Plateau		

BMP Identification

BMP NAME / ID: 2-8D

Must match Name/ID used on BMP Design Calculation Sheet

Design Rainfall Depth

85th Percentile, 24-hour Rainfall Depth, from the Isohyetal Map in Handbook Appendix E

D_{85}= 0.60 inches

Drainage Management Area Tabulation

Insert additional rows if needed to accommodate all DMAs draining to the BMP

DMA Type/ID	DMA Area (square feet)	Post-Project Surface Type	Effective Imperivous Fraction, I_f	DMA Runoff Factor	DMA Areas x Runoff Factor	*Design Storm Depth (in)*	*Design Capture Volume, V_{BMP} (cubic feet)*	*Proposed Volume on Plans (cubic feet)*
2-8D	*32,208*	*Concrete or Asphalt*	*1*	*0.89*	*28729.5*			

Santa Ana Watershed - BMP Design Volume, V_{BMP}

(Rev. 10-2011)

Legend: Required Entries / Calculated Cells

*(Note this worksheet shall **only** be used in conjunction with BMP designs from the **LID BMP Design Handbook**)*

Company Name	DRC Engineering, Inc.	Date	9/14/2021
Designed by	Leonardo Ilog	Case No	
Company Project Number/Name	20-750 Master Meridian West Campus Upper Plateau		

BMP Identification

BMP NAME / ID: 2-9D

Must match Name/ID used on BMP Design Calculation Sheet

Design Rainfall Depth

85th Percentile, 24-hour Rainfall Depth, from the Isohyetal Map in Handbook Appendix E

D_{85}= 0.60 inches

Drainage Management Area Tabulation

Insert additional rows if needed to accommodate all DMAs draining to the BMP

DMA Type/ID	DMA Area (square feet)	Post-Project Surface Type	Effective Imperivous Fraction, I_f	DMA Runoff Factor	DMA Areas x Runoff Factor	*Design Storm Depth (in)*	*Design Capture Volume, V_{BMP} (cubic feet)*	*Proposed Volume on Plans (cubic feet)*
2-9D	*40,287*	*Concrete or Asphalt*	*1*	*0.89*	*35936*			

Santa Ana Watershed - BMP Design Volume, V_{BMP}

(Rev. 10-2011)

Legend: Required Entries / Calculated Cells

*(Note this worksheet shall **only** be used in conjunction with BMP designs from the **LID BMP Design Handbook**)*

Company Name	DRC Engineering, Inc.	Date	9/14/2021
Designed by	Leonardo Ilog	Case No	
Company Project Number/Name	20-750 Master Meridian West Campus Upper Plateau		

BMP Identification

BMP NAME / ID: 2-10D

Must match Name/ID used on BMP Design Calculation Sheet

Design Rainfall Depth

85th Percentile, 24-hour Rainfall Depth, from the Isohyetal Map in Handbook Appendix E

D_{85}= 0.60 inches

Drainage Management Area Tabulation

Insert additional rows if needed to accommodate all DMAs draining to the BMP

DMA Type/ID	DMA Area (square feet)	Post-Project Surface Type	Effective Imperivous Fraction, I_f	DMA Runoff Factor	DMA Areas x Runoff Factor	*Design Storm Depth (in)*	*Design Capture Volume, V_{BMP} (cubic feet)*	*Proposed Volume on Plans (cubic feet)*
2-10D	*40,274*	*Concrete or Asphalt*	*1*	*0.89*	*35924.4*			

Santa Ana Watershed - BMP Design Volume, V_{BMP}

(Rev. 10-2011)

Legend: Required Entries / Calculated Cells

*(Note this worksheet shall **only** be used in conjunction with BMP designs from the **LID BMP Design Handbook**)*

Company Name	DRC Engineering, Inc.	Date	9/14/2021
Designed by	Leonardo Ilog	Case No	
Company Project Number/Name	20-750 Master Meridian West Campus Upper Plateau		

BMP Identification

BMP NAME / ID: 2-11D

Must match Name/ID used on BMP Design Calculation Sheet

Design Rainfall Depth

85th Percentile, 24-hour Rainfall Depth, from the Isohyetal Map in Handbook Appendix E

D_{85}= 0.60 inches

Drainage Management Area Tabulation

Insert additional rows if needed to accommodate all DMAs draining to the BMP

DMA Type/ID	DMA Area (square feet)	Post-Project Surface Type	Effective Imperivous Fraction, I_f	DMA Runoff Factor	DMA Areas x Runoff Factor	*Design Storm Depth (in)*	*Design Capture Volume, V_{BMP} (cubic feet)*	*Proposed Volume on Plans (cubic feet)*
2-11D	*11,368*	*Concrete or Asphalt*	*1*	*0.89*	*10140.3*			

Santa Ana Watershed - BMP Design Volume, V_{BMP}

(Rev. 10-2011)

Legend: Required Entries / Calculated Cells

*(Note this worksheet shall **only** be used in conjunction with BMP designs from the **LID BMP Design Handbook**)*

Company Name	DRC Engineering, Inc.	Date	9/14/2021
Designed by	Leonardo Ilog	Case No	
Company Project Number/Name	20-750 Master Meridian West Campus Upper Plateau		

BMP Identification

BMP NAME / ID: 2-12D

Must match Name/ID used on BMP Design Calculation Sheet

Design Rainfall Depth

85th Percentile, 24-hour Rainfall Depth, from the Isohyetal Map in Handbook Appendix E

D_{85}= 0.60 inches

Drainage Management Area Tabulation

Insert additional rows if needed to accommodate all DMAs draining to the BMP

DMA Type/ID	DMA Area (square feet)	Post-Project Surface Type	Effective Imperivous Fraction, I_f	DMA Runoff Factor	DMA Areas x Runoff Factor	*Design Storm Depth (in)*	*Design Capture Volume, V_{BMP} (cubic feet)*	*Proposed Volume on Plans (cubic feet)*
2-12D	*47,342*	*Concrete or Asphalt*	*1*	*0.89*	*42229.1*			
	47342		***Total***		**42229.1**	**0.60**	***2111.5***	***8,984***

Notes:

Santa Ana Watershed - BMP Design Volume, V_{BMP}

(Rev. 10-2011)

Legend: Required Entries / Calculated Cells

*(Note this worksheet shall **only** be used in conjunction with BMP designs from the **LID BMP Design Handbook**)*

Company Name	DRC Engineering, Inc.	Date	9/14/2021
Designed by	Leonardo Ilog	Case No	
Company Project Number/Name	20-750 Master Meridian West Campus Upper Plateau		

BMP Identification

BMP NAME / ID: 2-13D

Must match Name/ID used on BMP Design Calculation Sheet

Design Rainfall Depth

85th Percentile, 24-hour Rainfall Depth, from the Isohyetal Map in Handbook Appendix E

D_{85}= 0.60 inches

Drainage Management Area Tabulation

Insert additional rows if needed to accommodate all DMAs draining to the BMP

DMA Type/ID	DMA Area (square feet)	Post-Project Surface Type	Effective Imperivous Fraction, I_f	DMA Runoff Factor	DMA Areas x Runoff Factor	*Design Storm Depth (in)*	*Design Capture Volume, V_{BMP} (cubic feet)*	*Proposed Volume on Plans (cubic feet)*
2-13D	*45,549*	*Concrete or Asphalt*	*1*	*0.89*	*40629.7*			

Santa Ana Watershed - BMP Design Volume, V_{BMP}

(Rev. 10-2011)

Legend: Required Entries / Calculated Cells

*(Note this worksheet shall **only** be used in conjunction with BMP designs from the **LID BMP Design Handbook**)*

Company Name	DRC Engineering, Inc.	Date	9/14/2021
Designed by	Leonardo Ilog	Case No	
Company Project Number/Name	20-750 Master Meridian West Campus Upper Plateau		

BMP Identification

BMP NAME / ID: 3-1.1D

Must match Name/ID used on BMP Design Calculation Sheet

Design Rainfall Depth

85th Percentile, 24-hour Rainfall Depth, from the Isohyetal Map in Handbook Appendix E

D_{85}= 0.60 inches

Drainage Management Area Tabulation

Insert additional rows if needed to accommodate all DMAs draining to the BMP

DMA Type/ID	DMA Area (square feet)	Post-Project Surface Type	Effective Imperivous Fraction, I_f	DMA Runoff Factor	DMA Areas x Runoff Factor	*Design Storm Depth (in)*	*Design Capture Volume, V_{BMP} (cubic feet)*	*Proposed Volume on Plans (cubic feet)*
3-1.1D	*26,283*	*Concrete or Asphalt*	*1*	*0.89*	*23444.4*			

Santa Ana Watershed - BMP Design Volume, V_{BMP}

(Rev. 10-2011)

Legend: Required Entries / Calculated Cells

*(Note this worksheet shall **only** be used in conjunction with BMP designs from the **LID BMP Design Handbook**)*

Company Name	DRC Engineering, Inc.	Date	9/14/2021
Designed by	Leonardo Ilog	Case No	
Company Project Number/Name	20-750 Master Meridian West Campus Upper Plateau		

BMP Identification

BMP NAME / ID: 3-1.2D

Must match Name/ID used on BMP Design Calculation Sheet

Design Rainfall Depth

85th Percentile, 24-hour Rainfall Depth, from the Isohyetal Map in Handbook Appendix E

D_{85}= 0.60 inches

Drainage Management Area Tabulation

Insert additional rows if needed to accommodate all DMAs draining to the BMP

DMA Type/ID	DMA Area (square feet)	Post-Project Surface Type	Effective Imperivous Fraction, I_f	DMA Runoff Factor	DMA Areas x Runoff Factor	*Design Storm Depth (in)*	*Design Capture Volume, V_{BMP} (cubic feet)*	*Proposed Volume on Plans (cubic feet)*
3-1.2D	*49,183*	*Concrete or Asphalt*	*1*	*0.89*	*43871.2*			

Santa Ana Watershed - BMP Design Volume, V_{BMP}

(Rev. 10-2011)

Legend: Required Entries / Calculated Cells

*(Note this worksheet shall **only** be used in conjunction with BMP designs from the **LID BMP Design Handbook**)*

Company Name	DRC Engineering, Inc.	Date	9/14/2021
Designed by	Leonardo Ilog	Case No	
Company Project Number/Name	20-750 Master Meridian West Campus Upper Plateau		

BMP Identification

BMP NAME / ID: 3-2D

Must match Name/ID used on BMP Design Calculation Sheet

Design Rainfall Depth

85th Percentile, 24-hour Rainfall Depth, from the Isohyetal Map in Handbook Appendix E

D_{85}= 0.60 inches

Drainage Management Area Tabulation

Insert additional rows if needed to accommodate all DMAs draining to the BMP

DMA Type/ID	DMA Area (square feet)	Post-Project Surface Type	Effective Imperivous Fraction, I_f	DMA Runoff Factor	DMA Areas x Runoff Factor	*Design Storm Depth (in)*	*Design Capture Volume, V_{BMP} (cubic feet)*	*Proposed Volume on Plans (cubic feet)*
3-2D	*68,401*	*Concrete or Asphalt*	*1*	*0.89*	*61013.7*			

Santa Ana Watershed - BMP Design Volume, V_{BMP}

(Rev. 10-2011)

Legend: Required Entries / Calculated Cells

*(Note this worksheet shall **only** be used in conjunction with BMP designs from the **LID BMP Design Handbook**)*

Company Name	DRC Engineering, Inc.	Date	9/14/2021
Designed by	Leonardo Ilog	Case No	
Company Project Number/Name	20-750 Master Meridian West Campus Upper Plateau		

BMP Identification

BMP NAME / ID: 5-1D

Must match Name/ID used on BMP Design Calculation Sheet

Design Rainfall Depth

85th Percentile, 24-hour Rainfall Depth, from the Isohyetal Map in Handbook Appendix E

D_{85}= 0.60 inches

Drainage Management Area Tabulation

Insert additional rows if needed to accommodate all DMAs draining to the BMP

DMA Type/ID	DMA Area (square feet)	Post-Project Surface Type	Effective Imperivous Fraction, I_f	DMA Runoff Factor	DMA Areas x Runoff Factor	*Design Storm Depth (in)*	*Design Capture Volume, V_{BMP} (cubic feet)*	*Proposed Volume on Plans (cubic feet)*
5-1D	*43,809*	*Concrete or Asphalt*	*1*	*0.89*	*39077.6*			

Santa Ana Watershed - BMP Design Volume, V_{BMP}

(Rev. 10-2011)

Legend: Required Entries / Calculated Cells

*(Note this worksheet shall **only** be used in conjunction with BMP designs from the **LID BMP Design Handbook**)*

Company Name	DRC Engineering, Inc.	Date	9/14/2021
Designed by	Leonardo Ilog	Case No	
Company Project Number/Name	20-750 Master Meridian West Campus Upper Plateau		

BMP Identification

BMP NAME / ID: 5-2D

Must match Name/ID used on BMP Design Calculation Sheet

Design Rainfall Depth

85th Percentile, 24-hour Rainfall Depth, from the Isohyetal Map in Handbook Appendix E

D_{85}= 0.60 inches

Drainage Management Area Tabulation

Insert additional rows if needed to accommodate all DMAs draining to the BMP

DMA Type/ID	DMA Area (square feet)	Post-Project Surface Type	Effective Imperivous Fraction, I_f	DMA Runoff Factor	DMA Areas x Runoff Factor	*Design Storm Depth (in)*	*Design Capture Volume, V_{BMP} (cubic feet)*	*Proposed Volume on Plans (cubic feet)*
5-2D	*43,809*	*Concrete or Asphalt*	*1*	*0.89*	*39077.6*			

Santa Ana Watershed - BMP Design Volume, V_{BMP}

(Rev. 10-2011)

Legend: Required Entries / Calculated Cells

*(Note this worksheet shall **only** be used in conjunction with BMP designs from the **LID BMP Design Handbook**)*

Company Name	DRC Engineering, Inc.	Date	9/14/2021
Designed by	Leonardo Ilog	Case No	
Company Project Number/Name	20-750 Master Meridian West Campus Upper Plateau		

BMP Identification

BMP NAME / ID: 7-1D

Must match Name/ID used on BMP Design Calculation Sheet

Design Rainfall Depth

85th Percentile, 24-hour Rainfall Depth, from the Isohyetal Map in Handbook Appendix E

D_{85}= 0.60 inches

Drainage Management Area Tabulation

Insert additional rows if needed to accommodate all DMAs draining to the BMP

DMA Type/ID	DMA Area (square feet)	Post-Project Surface Type	Effective Imperivous Fraction, I_f	DMA Runoff Factor	DMA Areas x Runoff Factor	*Design Storm Depth (in)*	*Design Capture Volume, V_{BMP} (cubic feet)*	*Proposed Volume on Plans (cubic feet)*
7-1D	*58,780*	*Concrete or Asphalt*	*1*	*0.89*	*52431.8*			

Santa Ana Watershed - BMP Design Volume, V_{BMP}

(Rev. 10-2011)

Legend: Required Entries / Calculated Cells

*(Note this worksheet shall **only** be used in conjunction with BMP designs from the **LID BMP Design Handbook**)*

Company Name	DRC Engineering, Inc.	Date	9/14/2021
Designed by	Leonardo Ilog	Case No	
Company Project Number/Name	20-750 Master Meridian West Campus Upper Plateau		

BMP Identification

BMP NAME / ID: 7-2D

Must match Name/ID used on BMP Design Calculation Sheet

Design Rainfall Depth

85th Percentile, 24-hour Rainfall Depth,
from the Isohyetal Map in Handbook Appendix E

D_{85}= 0.60 inches

Drainage Management Area Tabulation

Insert additional rows if needed to accommodate all DMAs draining to the BMP

DMA Type/ID	DMA Area (square feet)	Post-Project Surface Type	Effective Imperivous Fraction, I_f	DMA Runoff Factor	DMA Areas x Runoff Factor	*Design Storm Depth (in)*	*Design Capture Volume, V_{BMP} (cubic feet)*	*Proposed Volume on Plans (cubic feet)*
7-2D	*50,083*	*Concrete or Asphalt*	*1*	*0.89*	*44674*			
	50083		***Total***		**44674**	**0.60**	***2233.7***	***8,984***

Notes:

Santa Ana Watershed - BMP Design Volume, V_{BMP}

(Rev. 10-2011)

Legend: Required Entries / Calculated Cells

*(Note this worksheet shall **only** be used in conjunction with BMP designs from the **LID BMP Design Handbook**)*

Company Name	DRC Engineering, Inc.	Date	9/14/2021
Designed by	Leonardo Ilog	Case No	
Company Project Number/Name	20-750 Master Meridian West Campus Upper Plateau		

BMP Identification

BMP NAME / ID: 9-1D

Must match Name/ID used on BMP Design Calculation Sheet

Design Rainfall Depth

85th Percentile, 24-hour Rainfall Depth, from the Isohyetal Map in Handbook Appendix E

D_{85}= 0.60 inches

Drainage Management Area Tabulation

Insert additional rows if needed to accommodate all DMAs draining to the BMP

DMA Type/ID	DMA Area (square feet)	Post-Project Surface Type	Effective Imperivous Fraction, I_f	DMA Runoff Factor	DMA Areas x Runoff Factor	*Design Storm Depth (in)*	*Design Capture Volume, V_{BMP} (cubic feet)*	*Proposed Volume on Plans (cubic feet)*
9-1D	*49,635*	*Concrete or Asphalt*	*1*	*0.89*	*44274.4*			

Santa Ana Watershed - BMP Design Volume, V_{BMP}

(Rev. 10-2011)

Legend: Required Entries / Calculated Cells

*(Note this worksheet shall **only** be used in conjunction with BMP designs from the **LID BMP Design Handbook**)*

Company Name	DRC Engineering, Inc.	Date	9/14/2021
Designed by	Leonardo Ilog	Case No	
Company Project Number/Name	20-750 Master Meridian West Campus Upper Plateau		

BMP Identification

BMP NAME / ID: 9-2D

Must match Name/ID used on BMP Design Calculation Sheet

Design Rainfall Depth

85th Percentile, 24-hour Rainfall Depth, from the Isohyetal Map in Handbook Appendix E

D_{85}= 0.60 inches

Drainage Management Area Tabulation

Insert additional rows if needed to accommodate all DMAs draining to the BMP

DMA Type/ID	DMA Area (square feet)	Post-Project Surface Type	Effective Imperivous Fraction, I_f	DMA Runoff Factor	DMA Areas x Runoff Factor	*Design Storm Depth (in)*	*Design Capture Volume, V_{BMP} (cubic feet)*	*Proposed Volume on Plans (cubic feet)*
9-2D	*51,705*	*Concrete or Asphalt*	*1*	*0.89*	*46120.9*			

Santa Ana Watershed - BMP Design Volume, V_{BMP}

(Rev. 10-2011)

Legend: Required Entries / Calculated Cells

*(Note this worksheet shall **only** be used in conjunction with BMP designs from the **LID BMP Design Handbook**)*

Company Name	DRC Engineering, Inc.	Date	9/14/2021
Designed by	Leonardo Ilog	Case No	
Company Project Number/Name	20-750 Master Meridian West Campus Upper Plateau		

BMP Identification

BMP NAME / ID: 9-3D

Must match Name/ID used on BMP Design Calculation Sheet

Design Rainfall Depth

85th Percentile, 24-hour Rainfall Depth, from the Isohyetal Map in Handbook Appendix E

D_{85}= 0.60 inches

Drainage Management Area Tabulation

Insert additional rows if needed to accommodate all DMAs draining to the BMP

DMA Type/ID	DMA Area (square feet)	Post-Project Surface Type	Effective Imperivous Fraction, I_f	DMA Runoff Factor	DMA Areas x Runoff Factor	*Design Storm Depth (in)*	*Design Capture Volume, V_{BMP} (cubic feet)*	*Proposed Volume on Plans (cubic feet)*
9-3D	*64,804*	*Concrete or Asphalt*	*1*	*0.89*	*57805.2*			

Santa Ana Watershed - BMP Design Volume, V_{BMP}

(Rev. 10-2011)

Legend: Required Entries / Calculated Cells

*(Note this worksheet shall **only** be used in conjunction with BMP designs from the **LID BMP Design Handbook**)*

Company Name	DRC Engineering, Inc.	Date	9/14/2021
Designed by	Leonardo Ilog	Case No	
Company Project Number/Name	20-750 Master Meridian West Campus Upper Plateau		

BMP Identification

BMP NAME / ID: 9-4D

Must match Name/ID used on BMP Design Calculation Sheet

Design Rainfall Depth

85th Percentile, 24-hour Rainfall Depth, from the Isohyetal Map in Handbook Appendix E

D_{85}= 0.60 inches

Drainage Management Area Tabulation

Insert additional rows if needed to accommodate all DMAs draining to the BMP

DMA Type/ID	DMA Area (square feet)	Post-Project Surface Type	Effective Imperivous Fraction, I_f	DMA Runoff Factor	DMA Areas x Runoff Factor	*Design Storm Depth (in)*	*Design Capture Volume, V_{BMP} (cubic feet)*	*Proposed Volume on Plans (cubic feet)*
9-4D	*65,467*	*Concrete or Asphalt*	*1*	*0.89*	*58396.6*			
	65467		***Total***		**58396.6**	**0.60**	***2919.8***	***11,706***

Notes:

Santa Ana Watershed - BMP Design Volume, V_{BMP}

(Rev. 10-2011)

Legend: Required Entries / Calculated Cells

*(Note this worksheet shall **only** be used in conjunction with BMP designs from the **LID BMP Design Handbook**)*

Company Name	DRC Engineering, Inc.	Date	9/14/2021
Designed by	Leonardo Ilog	Case No	
Company Project Number/Name	20-750 Master Meridian West Campus Upper Plateau		

BMP Identification

BMP NAME / ID: 9-5D

Must match Name/ID used on BMP Design Calculation Sheet

Design Rainfall Depth

85th Percentile, 24-hour Rainfall Depth, from the Isohyetal Map in Handbook Appendix E

D_{85}= 0.60 inches

Drainage Management Area Tabulation

Insert additional rows if needed to accommodate all DMAs draining to the BMP

DMA Type/ID	DMA Area (square feet)	Post-Project Surface Type	Effective Imperivous Fraction, I_f	DMA Runoff Factor	DMA Areas x Runoff Factor	*Design Storm Depth (in)*	*Design Capture Volume, V_{BMP} (cubic feet)*	*Proposed Volume on Plans (cubic feet)*
9-5D	*53,700*	*Concrete or Asphalt*	*1*	*0.89*	*47900.4*			

Santa Ana Watershed - BMP Design Volume, V_{BMP}

(Rev. 10-2011)

Legend: Required Entries / Calculated Cells

*(Note this worksheet shall **only** be used in conjunction with BMP designs from the **LID BMP Design Handbook**)*

Company Name	DRC Engineering, Inc.	Date	9/14/2021
Designed by	Leonardo Ilog	Case No	
Company Project Number/Name	20-750 Master Meridian West Campus Upper Plateau		

BMP Identification

BMP NAME / ID: 9-6D

Must match Name/ID used on BMP Design Calculation Sheet

Design Rainfall Depth

85th Percentile, 24-hour Rainfall Depth, from the Isohyetal Map in Handbook Appendix E

D_{85}= 0.60 inches

Drainage Management Area Tabulation

Insert additional rows if needed to accommodate all DMAs draining to the BMP

DMA Type/ID	DMA Area (square feet)	Post-Project Surface Type	Effective Imperivous Fraction, I_f	DMA Runoff Factor	DMA Areas x Runoff Factor	*Design Storm Depth (in)*	*Design Capture Volume, V_{BMP} (cubic feet)*	*Proposed Volume on Plans (cubic feet)*
9-6D	*55,360*	*Concrete or Asphalt*	*1*	*0.89*	*49381.1*			

Santa Ana Watershed - BMP Design Volume, V_{BMP}

(Rev. 10-2011)

Legend: Required Entries / Calculated Cells

*(Note this worksheet shall **only** be used in conjunction with BMP designs from the **LID BMP Design Handbook**)*

Company Name	DRC Engineering, Inc.	Date	9/14/2021
Designed by	Leonardo Ilog	Case No	
Company Project Number/Name	20-750 Master Meridian West Campus Upper Plateau		

BMP Identification

BMP NAME / ID: 9-7D

Must match Name/ID used on BMP Design Calculation Sheet

Design Rainfall Depth

85th Percentile, 24-hour Rainfall Depth, from the Isohyetal Map in Handbook Appendix E

D_{85}= 0.60 inches

Drainage Management Area Tabulation

Insert additional rows if needed to accommodate all DMAs draining to the BMP

DMA Type/ID	DMA Area (square feet)	Post-Project Surface Type	Effective Imperivous Fraction, I_f	DMA Runoff Factor	DMA Areas x Runoff Factor	*Design Storm Depth (in)*	*Design Capture Volume, V_{BMP} (cubic feet)*	*Proposed Volume on Plans (cubic feet)*
9-7D	*24,228*	*Concrete or Asphalt*	*1*	*0.89*	*21611.4*			

Santa Ana Watershed - BMP Design Volume, V_{BMP}

(Rev. 10-2011)

Legend: Required Entries / Calculated Cells

*(Note this worksheet shall **only** be used in conjunction with BMP designs from the **LID BMP Design Handbook**)*

Company Name	DRC Engineering, Inc.	Date	9/14/2021
Designed by	Leonardo Ilog	Case No	
Company Project Number/Name	20-750 Master Meridian West Campus Upper Plateau		

BMP Identification

BMP NAME / ID: 9-8D

Must match Name/ID used on BMP Design Calculation Sheet

Design Rainfall Depth

85th Percentile, 24-hour Rainfall Depth, from the Isohyetal Map in Handbook Appendix E

D_{85}= 0.60 inches

Drainage Management Area Tabulation

Insert additional rows if needed to accommodate all DMAs draining to the BMP

DMA Type/ID	DMA Area (square feet)	Post-Project Surface Type	Effective Imperivous Fraction, I_f	DMA Runoff Factor	DMA Areas x Runoff Factor	*Design Storm Depth (in)*	*Design Capture Volume, V_{BMP} (cubic feet)*	*Proposed Volume on Plans (cubic feet)*
9-8D	*18,915*	*Concrete or Asphalt*	*1*	*0.89*	*16872.2*			

Santa Ana Watershed - BMP Design Volume, V_{BMP}

(Rev. 10-2011)

Legend: Required Entries / Calculated Cells

*(Note this worksheet shall **only** be used in conjunction with BMP designs from the **LID BMP Design Handbook**)*

Company Name	DRC Engineering, Inc.	Date	9/14/2021
Designed by	Leonardo Ilog	Case No	
Company Project Number/Name	20-750 Master Meridian West Campus Upper Plateau		

BMP Identification

BMP NAME / ID: 9-9D

Must match Name/ID used on BMP Design Calculation Sheet

Design Rainfall Depth

85th Percentile, 24-hour Rainfall Depth, from the Isohyetal Map in Handbook Appendix E

D_{85}= 0.60 inches

Drainage Management Area Tabulation

Insert additional rows if needed to accommodate all DMAs draining to the BMP

DMA Type/ID	DMA Area (square feet)	Post-Project Surface Type	Effective Imperivous Fraction, I_f	DMA Runoff Factor	DMA Areas x Runoff Factor	*Design Storm Depth (in)*	*Design Capture Volume, V_{BMP} (cubic feet)*	*Proposed Volume on Plans (cubic feet)*
9-9D	*11,685*	*Concrete or Asphalt*	*1*	*0.89*	*10423*			

Santa Ana Watershed - BMP Design Volume, V_{BMP}

(Rev. 10-2011)

Legend: Required Entries / Calculated Cells

*(Note this worksheet shall **only** be used in conjunction with BMP designs from the **LID BMP Design Handbook**)*

Company Name	DRC Engineering, Inc.	Date	9/14/2021
Designed by	Leonardo Ilog	Case No	
Company Project Number/Name	20-750 Master Meridian West Campus Upper Plateau		

BMP Identification

BMP NAME / ID: 9-10D

Must match Name/ID used on BMP Design Calculation Sheet

Design Rainfall Depth

85th Percentile, 24-hour Rainfall Depth, from the Isohyetal Map in Handbook Appendix E

D_{85}= 0.60 inches

Drainage Management Area Tabulation

Insert additional rows if needed to accommodate all DMAs draining to the BMP

DMA Type/ID	DMA Area (square feet)	Post-Project Surface Type	Effective Imperivous Fraction, I_f	DMA Runoff Factor	DMA Areas x Runoff Factor	*Design Storm Depth (in)*	*Design Capture Volume, V_{BMP} (cubic feet)*	*Proposed Volume on Plans (cubic feet)*
9-10D	*11,699*	*Concrete or Asphalt*	*1*	*0.89*	*10435.5*			

Santa Ana Watershed - BMP Design Volume, V_{BMP}

(Rev. 10-2011)

Legend: Required Entries / Calculated Cells

*(Note this worksheet shall **only** be used in conjunction with BMP designs from the **LID BMP Design Handbook**)*

Company Name	DRC Engineering, Inc.	Date	9/14/2021
Designed by	Leonardo Ilog	Case No	
Company Project Number/Name	20-750 Master Meridian West Campus Upper Plateau		

BMP Identification

BMP NAME / ID: 16-1D

Must match Name/ID used on BMP Design Calculation Sheet

Design Rainfall Depth

85th Percentile, 24-hour Rainfall Depth, from the Isohyetal Map in Handbook Appendix E

D_{85}= 0.60 inches

Drainage Management Area Tabulation

Insert additional rows if needed to accommodate all DMAs draining to the BMP

DMA Type/ID	DMA Area (square feet)	Post-Project Surface Type	Effective Imperivous Fraction, I_f	DMA Runoff Factor	DMA Areas x Runoff Factor	*Design Storm Depth (in)*	*Design Capture Volume, V_{BMP} (cubic feet)*	*Proposed Volume on Plans (cubic feet)*
16-1D	*30,030*	*Concrete or Asphalt*	*1*	*0.89*	*26786.8*			

Santa Ana Watershed - BMP Design Volume, V_{BMP}

(Rev. 10-2011)

Legend: Required Entries / Calculated Cells

*(Note this worksheet shall **only** be used in conjunction with BMP designs from the **LID BMP Design Handbook**)*

Company Name	DRC Engineering, Inc.	Date	9/14/2021
Designed by	Leonardo Ilog	Case No	
Company Project Number/Name	20-750 Master Meridian West Campus Upper Plateau		

BMP Identification

BMP NAME / ID: 16-2D

Must match Name/ID used on BMP Design Calculation Sheet

Design Rainfall Depth

85th Percentile, 24-hour Rainfall Depth, from the Isohyetal Map in Handbook Appendix E

D_{85}= 0.60 inches

Drainage Management Area Tabulation

Insert additional rows if needed to accommodate all DMAs draining to the BMP

DMA Type/ID	DMA Area (square feet)	Post-Project Surface Type	Effective Imperivous Fraction, I_f	DMA Runoff Factor	DMA Areas x Runoff Factor	*Design Storm Depth (in)*	*Design Capture Volume, V_{BMP} (cubic feet)*	*Proposed Volume on Plans (cubic feet)*
16-2D	*57,761*	*Concrete or Asphalt*	*1*	*0.89*	*51522.8*			

Santa Ana Watershed - BMP Design Volume, V_{BMP}

(Rev. 10-2011)

Legend: Required Entries / Calculated Cells

*(Note this worksheet shall **only** be used in conjunction with BMP designs from the **LID BMP Design Handbook**)*

Company Name	DRC Engineering, Inc.	Date	9/14/2021
Designed by	Leonardo Ilog	Case No	
Company Project Number/Name	20-750 Master Meridian West Campus Upper Plateau		

BMP Identification

BMP NAME / ID: 16-3D

Must match Name/ID used on BMP Design Calculation Sheet

Design Rainfall Depth

85th Percentile, 24-hour Rainfall Depth, from the Isohyetal Map in Handbook Appendix E

D_{85}= 0.60 inches

Drainage Management Area Tabulation

Insert additional rows if needed to accommodate all DMAs draining to the BMP

DMA Type/ID	DMA Area (square feet)	Post-Project Surface Type	Effective Imperivous Fraction, I_f	DMA Runoff Factor	DMA Areas x Runoff Factor	*Design Storm Depth (in)*	*Design Capture Volume, V_{BMP} (cubic feet)*	*Proposed Volume on Plans (cubic feet)*
16-3D	*56,667*	*Concrete or Asphalt*	*1*	*0.89*	*50547*			

Effective Impervious Fraction

Developed Cover Types	Effective Impervious Fraction
Roofs	1.00
Concrete or Asphalt	1.00
Grouted or Gapless Paving Blocks	1.00
Compacted Soil (e.g. unpaved parking)	0.40
Decomposed Granite	0.40
Permeable Paving Blocks w/ Sand Filled Gap	0.25
Class 2 Base	0.30
Gravel or Class 2 Permeable Base	0.10
Pervious Concrete / Porous Asphalt	0.10
Open and Porous Pavers	0.10
Turf block	0.10
Ornamental Landscaping	0.10
Natural (A Soil)	0.03
Natural (B Soil)	0.15
Natural (C Soil)	0.30
Natural (D Soil)	0.40

Mixed Surface Types

Use this table to determine the effective impervious fraction for the V_{BMP} and Q_{BMP} calculation sheets

Detention Tank and Treatment Volume Calculations

Street Name	DMA	DMA Area (acres)	Estimated Required Volume (6,000 cu-ft/acre of Impervious Area)	Detention Pipe Diameter (inches)	Detention Volume per Linear Foot (cu-ft/ft)	Required Pipe Length (ft) (48" dia. pipe)	Provided # of 50 LF Pipe	Storage Provided (cu-ft)	MWS Unit Model No.	MWS Unit 48-hour Treatment Capacity (cu-ft)
Linebacker	2-1D	0.859	5,156	48	12.57	411	9	5,655	MWS-L-4-13	6,261
Linebacker	2-2D	0.979	5,872	48	12.57	468	10	6,283	MWS-L-4-17	8,984
Bunker Hill	2-3D	1.693	10,157	48	12.57	809	17	10,681	MWS-L-4-21	11,706
Bunker Hill	2-4D	1.759	10,556	48	12.57	841	17	10,681	MWS-L-4-21	11,706
Airman	2-5D	0.932	5,593	48	12.57	446	9	5,655	MWS-L-4-15	7,623
Airman	2-6D	1.046	6,274	48	12.57	500	10	6,283	MWS-L-4-17	8,984
Cactus	2-7D	0.739	4,435	48	12.57	353	8	5,027	MWS-L-4-13	6,261
Cactus	2-8D	0.739	4,437	48	12.57	354	8	5,027	MWS-L-4-13	6,261
Cactus	2-9D	0.925	5,550	48	12.57	442	9	5,655	MWS-L-4-15	7,623
Cactus	2-10D	0.925	5,548	48	12.57	442	9	5,655	MWS-L-4-15	7,623
Cactus	2-11D	0.261	1,566	48	12.57	125	3	1,885	MWS-L-4-6	3,200
Barton	2-12D	1.087	6,521	48	12.57	519	11	6,912	MWS-L-4-17	8,984
Barton	2-13D	1.046	6,274	48	12.57	500	10	6,283	MWS-L-4-17	8,984
Arclight	3-1.1D	0.603	3,621	48	12.57	289	6	3,770	MWS-L-4-13	6,261
Airman	3-1.2D	1.129	6,775	48	12.57	540	11	6,912	MWS-L-4-17	8,984
Airman	3-2D	1.570	9,422	48	12.57	750	15	9,425	MWS-L-4-21	11,706
Arclight	5-1D	1.006	6,035	48	12.57	481	10	6,283	MWS-L-4-15	7,623
Arclight	5-2D	1.006	6,035	48	12.57	481	10	6,283	MWS-L-4-15	7,623
Linebacker	7-1D	1.349	8,097	48	12.57	645	13	8,168	MWS-L-4-19	10,345
Linebacker	7-2D	1.150	6,899	48	12.57	550	11	6,912	MWS-L-4-17	8,984
Cactus	9-1D	1.139	6,837	48	12.57	545	11	6,912	MWS-L-4-17	8,984
Cactus	9-2D	1.187	7,122	48	12.57	567	12	7,540	MWS-L-4-17	8,984
Cactus	9-3D	1.488	8,927	48	12.57	711	15	9,425	MWS-L-4-19	10,345
Cactus	9-4D	1.503	9,018	48	12.57	718	15	9,425	MWS-L-4-21	11,706
Cactus	9-5D	1.233	7,397	48	12.57	589	12	7,540	MWS-L-4-17	8,984
Cactus	9-6D	1.271	7,626	48	12.57	607	13	8,168	MWS-L-4-17	8,984
Brown	9-7D	0.556	3,338	48	12.57	266	6	3,770	MWS-L-4-13	5,036
Brown	9-8D	0.434	2,606	48	12.57	208	5	3,142	MWS-L-4-8	5,036
Brown	9-9D	0.268	1,610	48	12.57	129	3	1,885	MWS-L-4-4	2,280
Brown	9-10D	0.269	1,612	48	12.57	129	3	1,885	MWS-L-4-4	2,280
Barton	16-1D	0.689	4,137	48	12.57	330	7	4,398	MWS-L-4-13	6,261
Barton	16-2D	1.326	7,957	48	12.57	634	13	8,168	MWS-L-4-17	8,984
Barton	16-3D	1.301	7,806	48	12.57	622	13	8,168	MWS-L-4-17	8,984

SITE SPECIFIC DATA			
PROJECT NAME		20-750 Meridian Upper Plateau	
PROJECT LOCATION		Riverside, CA	
STRUCTURE ID		2-1D	
TREATMENT REQUIRED			
VOLUME BASED (CF)		FLOW BASED (CFS)	
5,156			
TREATMENT HGL AVAILABLE (FT)			
PEAK BYPASS REQUIRED (CFS) – IF APPLICABLE			
PIPE DATA	I.E.	MATERIAL	DIAMETER
INLET PIPE 1			
INLET PIPE 2			
OUTLET PIPE			
	PRETREATMENT	BIOFILTRATION	DISCHARGE
RIM ELEVATION			
SURFACE LOAD	PARKWAY	OPEN PLANTER	PARKWAY
FRAME & COVER	ø30"	N/A	ø24"
WETLANDMEDIA VOLUME (CY)			3.05
WETLANDMEDIA DELIVERY METHOD			TBD
ORIFICE SIZE (DIA. INCHES)			ø1.71"
MAXIMUM PICK WEIGHT (LBS)			27000
NOTES:			

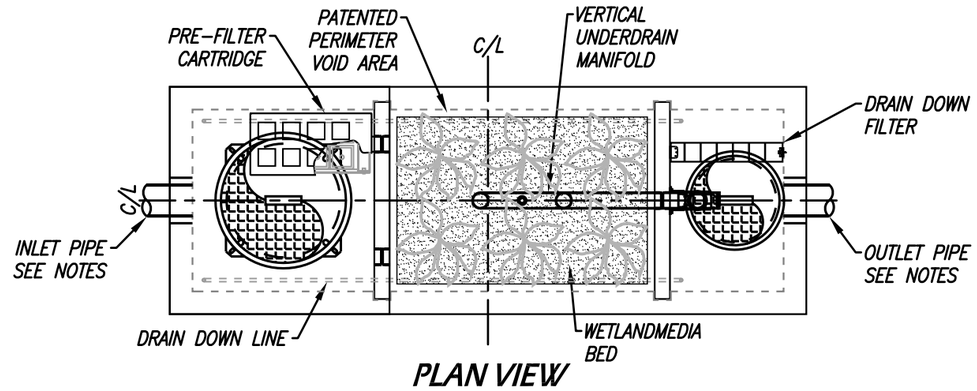

PLAN VIEW

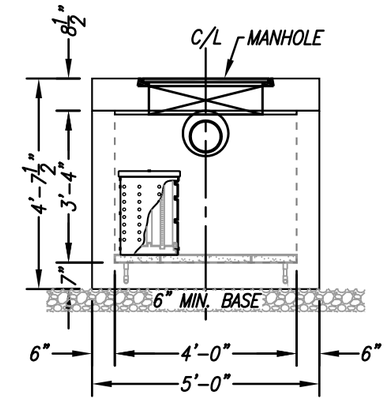

LEFT END VIEW

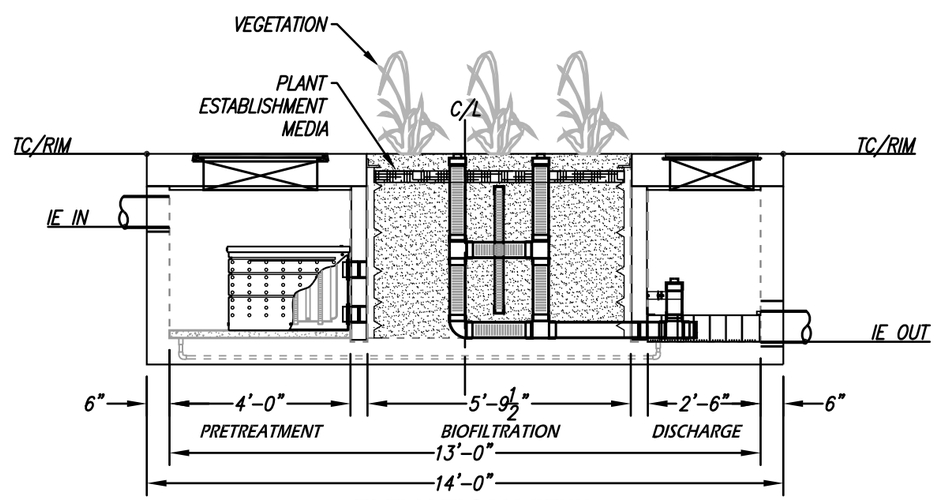

ELEVATION VIEW

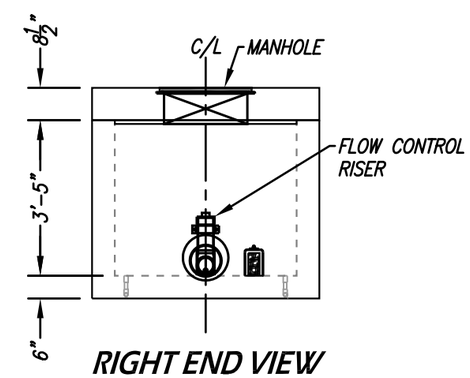

RIGHT END VIEW

INSTALLATION NOTES

1. CONTRACTOR TO PROVIDE ALL LABOR, EQUIPMENT, MATERIALS AND INCIDENTALS REQUIRED TO OFFLOAD AND INSTALL THE SYSTEM AND APPURTENANCES IN ACCORDANCE WITH THIS DRAWING AND THE MANUFACTURERS SPECIFICATIONS, UNLESS OTHERWISE STATED IN MANUFACTURERS CONTRACT.
2. UNIT MUST BE INSTALLED ON LEVEL BASE. MANUFACTURER RECOMMENDS A MINIMUM 6" LEVEL ROCK BASE UNLESS SPECIFIED BY THE PROJECT ENGINEER. CONTRACTOR IS RESPONSIBLE TO VERIFY PROJECT ENGINEERS RECOMMENDED BASE SPECIFICATIONS.
3. ALL PIPES MUST BE FLUSH WITH INSIDE SURFACE OF CONCRETE. (PIPES CANNOT INTRUDE BEYOND FLUSH). INVERT OF OUTFLOW PIPE MUST BE FLUSH WITH DISCHARGE CHAMBER FLOOR. ALL GAPS AROUND PIPES SHALL BE SEALED WATER TIGHT WITH A NON-SHRINK GROUT PER MANUFACTURERS STANDARD CONNECTION DETAIL AND SHALL MEET OR EXCEED REGIONAL PIPE CONNECTION STANDARDS.
4. CONTRACTOR TO SUPPLY AND INSTALL ALL EXTERNAL CONNECTING PIPES.
5. CONTRACTOR RESPONSIBLE FOR INSTALLATION OF ALL RISERS, MANHOLES, AND HATCHES. CONTRACTOR TO GROUT ALL MANHOLES AND HATCHES TO MATCH FINISHED SURFACE UNLESS SPECIFIED OTHERWISE.
6. DRIP OR SPRAY IRRIGATION REQUIRED ON ALL UNITS WITH VEGETATION.

GENERAL NOTES

1. MANUFACTURER TO PROVIDE ALL MATERIALS UNLESS OTHERWISE NOTED.
2. ALL DIMENSIONS, ELEVATIONS, SPECIFICATIONS AND CAPACITIES ARE SUBJECT TO CHANGE. FOR PROJECT SPECIFIC DRAWINGS DETAILING EXACT DIMENSIONS, WEIGHTS AND ACCESSORIES PLEASE CONTACT MANUFACTURER.

TREATMENT FLOW (CFS)	0.144
OPERATING HEAD (FT)	3.4
PRETREATMENT LOADING RATE (GPM/SF)	TBD
WETLAND MEDIA LOADING RATE (GPM/SF)	1.0

THE PRODUCT DESCRIBED MAY BE PROTECTED BY ONE OR MORE OF THE FOLLOWING US PATENTS: 7,425,262; 7,470,362; 7,674,378; 8,303,816; RELATED FOREIGN PATENTS OR OTHER PATENTS PENDING

PROPRIETARY AND CONFIDENTIAL:

THE INFORMATION CONTAINED IN THIS DRAWING IS THE SOLE PROPERTY OF MODULAR WETLANDS SYSTEMS. ANY REPRODUCTION IN PART OR AS A WHOLE WITHOUT THE WRITTEN PERMISSION OF MODULAR WETLANDS SYSTEMS IS PROHIBITED.

MODULAR WETLANDS
www.ModularWetlands.com | (855) 5MOD-WET

MWS-L-4-13-V
STORMWATER BIOFILTRATION SYSTEM STANDARD DETAIL

SITE SPECIFIC DATA			
PROJECT NAME		20-750 Meridian Upper Plateau	
PROJECT LOCATION		Riverside, CA	
STRUCTURE ID		2-2D	
TREATMENT REQUIRED			
VOLUME BASED (CF)		FLOW BASED (CFS)	
5,872			
TREATMENT HGL AVAILABLE (FT)			
PEAK BYPASS REQUIRED (CFS) – IF APPLICABLE			
PIPE DATA	I.E.	MATERIAL	DIAMETER
INLET PIPE 1			
INLET PIPE 2			
OUTLET PIPE			
	PRETREATMENT	BIOFILTRATION	DISCHARGE
RIM ELEVATION			
SURFACE LOAD	PARKWAY	OPEN PLANTER	PARKWAY
FRAME & COVER	ø30"	N/A	ø24"
WETLANDMEDIA VOLUME (CY)			5.41
WETLANDMEDIA DELIVERY METHOD			TBD
ORIFICE SIZE (DIA. INCHES)			ø2.05"
MAXIMUM PICK WEIGHT (LBS)			36000
NOTES:			

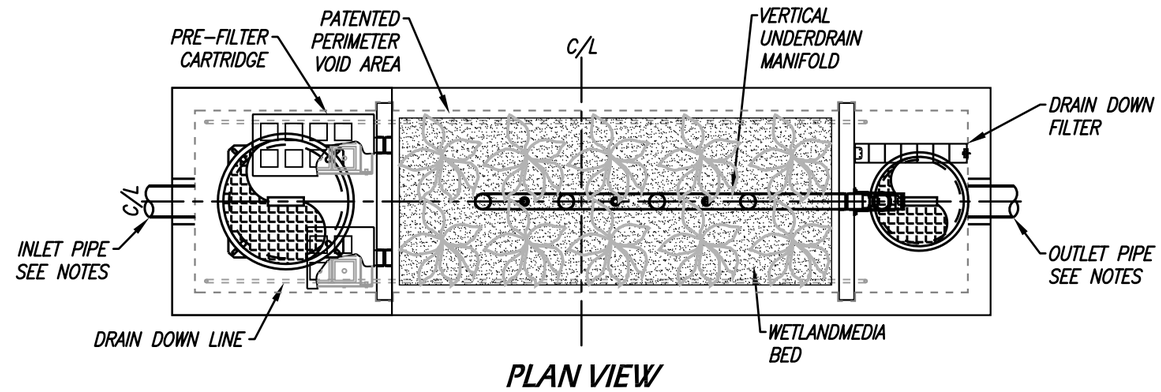

PLAN VIEW

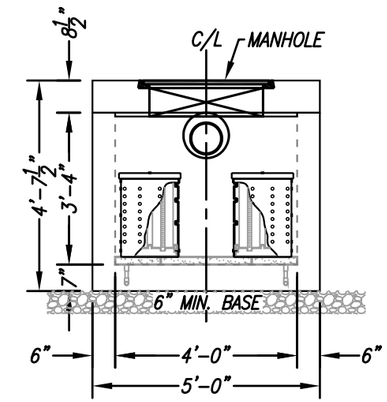

LEFT END VIEW

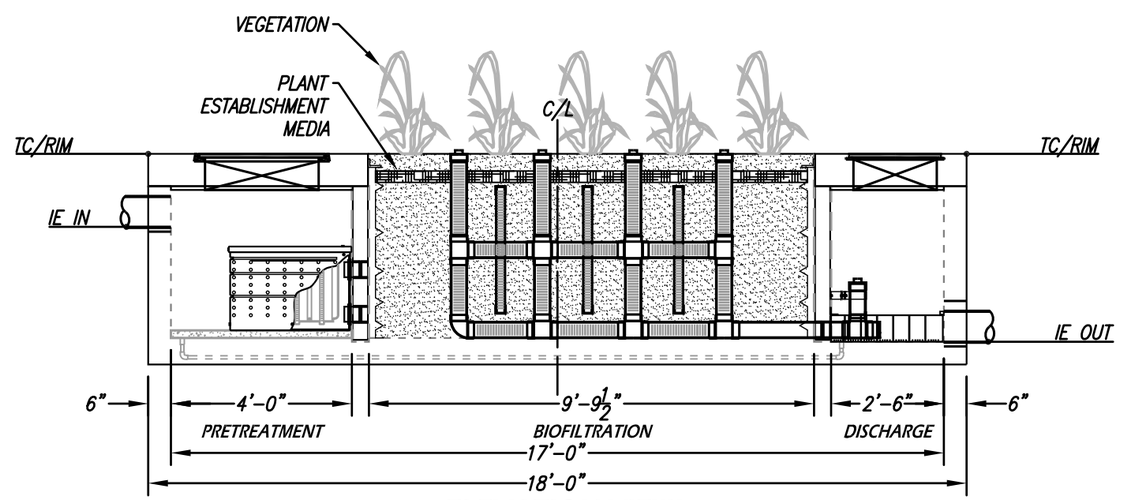

ELEVATION VIEW

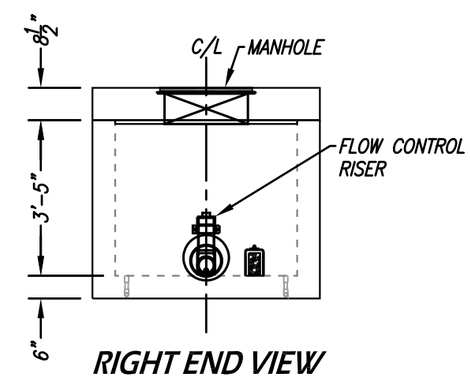

RIGHT END VIEW

INSTALLATION NOTES

1. CONTRACTOR TO PROVIDE ALL LABOR, EQUIPMENT, MATERIALS AND INCIDENTALS REQUIRED TO OFFLOAD AND INSTALL THE SYSTEM AND APPURTENANCES IN ACCORDANCE WITH THIS DRAWING AND THE MANUFACTURERS SPECIFICATIONS, UNLESS OTHERWISE STATED IN MANUFACTURERS CONTRACT.
2. UNIT MUST BE INSTALLED ON LEVEL BASE. MANUFACTURER RECOMMENDS A MINIMUM 6" LEVEL ROCK BASE UNLESS SPECIFIED BY THE PROJECT ENGINEER. CONTRACTOR IS RESPONSIBLE TO VERIFY PROJECT ENGINEERS RECOMMENDED BASE SPECIFICATIONS.
3. ALL PIPES MUST BE FLUSH WITH INSIDE SURFACE OF CONCRETE. (PIPES CANNOT INTRUDE BEYOND FLUSH). INVERT OF OUTFLOW PIPE MUST BE FLUSH WITH DISCHARGE CHAMBER FLOOR. ALL GAPS AROUND PIPES SHALL BE SEALED WATER TIGHT WITH A NON-SHRINK GROUT PER MANUFACTURERS STANDARD CONNECTION DETAIL AND SHALL MEET OR EXCEED REGIONAL PIPE CONNECTION STANDARDS.
4. CONTRACTOR TO SUPPLY AND INSTALL ALL EXTERNAL CONNECTING PIPES.
5. CONTRACTOR RESPONSIBLE FOR INSTALLATION OF ALL RISERS, MANHOLES, AND HATCHES. CONTRACTOR TO GROUT ALL MANHOLES AND HATCHES TO MATCH FINISHED SURFACE UNLESS SPECIFIED OTHERWISE.
6. DRIP OR SPRAY IRRIGATION REQUIRED ON ALL UNITS WITH VEGETATION.

GENERAL NOTES

1. MANUFACTURER TO PROVIDE ALL MATERIALS UNLESS OTHERWISE NOTED.
2. ALL DIMENSIONS, ELEVATIONS, SPECIFICATIONS AND CAPACITIES ARE SUBJECT TO CHANGE. FOR PROJECT SPECIFIC DRAWINGS DETAILING EXACT DIMENSIONS, WEIGHTS AND ACCESSORIES PLEASE CONTACT MANUFACTURER.

TREATMENT FLOW (CFS)	0.206
OPERATING HEAD (FT)	3.4
PRETREATMENT LOADING RATE (GPM/SF)	TBD
WETLAND MEDIA LOADING RATE (GPM/SF)	1.0

THE PRODUCT DESCRIBED MAY BE PROTECTED BY ONE OR MORE OF THE FOLLOWING US PATENTS: 7,425,262; 7,470,362; 7,674,378; 8,303,816; RELATED FOREIGN PATENTS OR OTHER PATENTS PENDING

PROPRIETARY AND CONFIDENTIAL:

THE INFORMATION CONTAINED IN THIS DRAWING IS THE SOLE PROPERTY OF MODULAR WETLANDS SYSTEMS. ANY REPRODUCTION IN PART OR AS A WHOLE WITHOUT THE WRITTEN PERMISSION OF MODULAR WETLANDS SYSTEMS IS PROHIBITED.

MODULAR WETLANDS
www.ModularWetlands.com | (855) 5MOD-WET

MWS-L-4-17-V
STORMWATER BIOFILTRATION SYSTEM STANDARD DETAIL

SITE SPECIFIC DATA			
PROJECT NAME		20-750 Meridian Upper Plateau	
PROJECT LOCATION		Riverside, CA	
STRUCTURE ID		2-3D	
TREATMENT REQUIRED			
VOLUME BASED (CF)		FLOW BASED (CFS)	
10,157			
TREATMENT HGL AVAILABLE (FT)			
PEAK BYPASS REQUIRED (CFS) – IF APPLICABLE			
PIPE DATA	I.E.	MATERIAL	DIAMETER
INLET PIPE 1			
INLET PIPE 2			
OUTLET PIPE			
	PRETREATMENT	BIOFILTRATION	DISCHARGE
RIM ELEVATION			
SURFACE LOAD	PARKWAY	OPEN PLANTER	PARKWAY
FRAME & COVER	ø30"	N/A	ø24"
WETLANDMEDIA VOLUME (CY)			7.63
WETLANDMEDIA DELIVERY METHOD			TBD
ORIFICE SIZE (DIA. INCHES)			ø2.34"
MAXIMUM PICK WEIGHT (LBS)			43000
NOTES:			

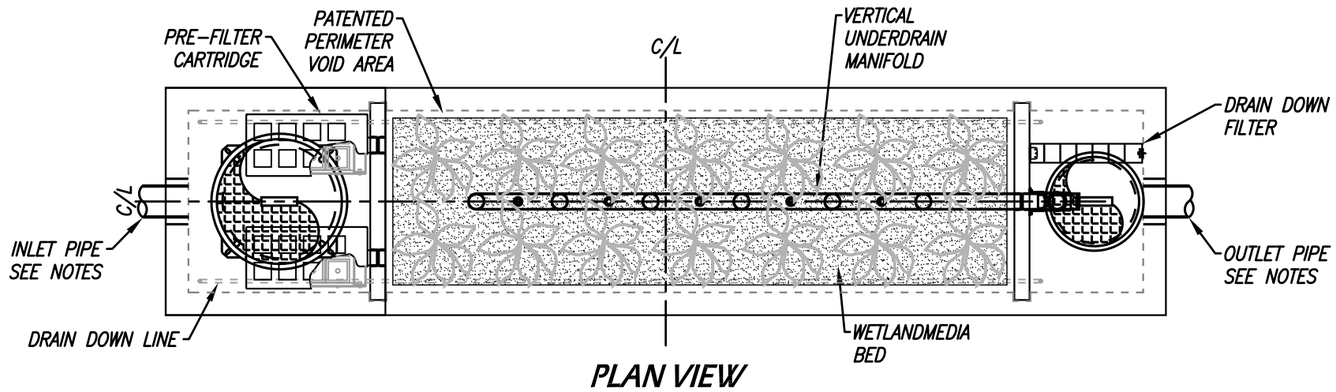

PLAN VIEW

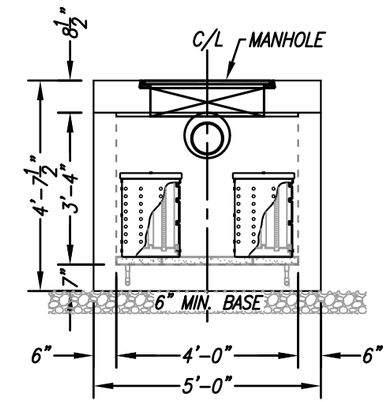

LEFT END VIEW

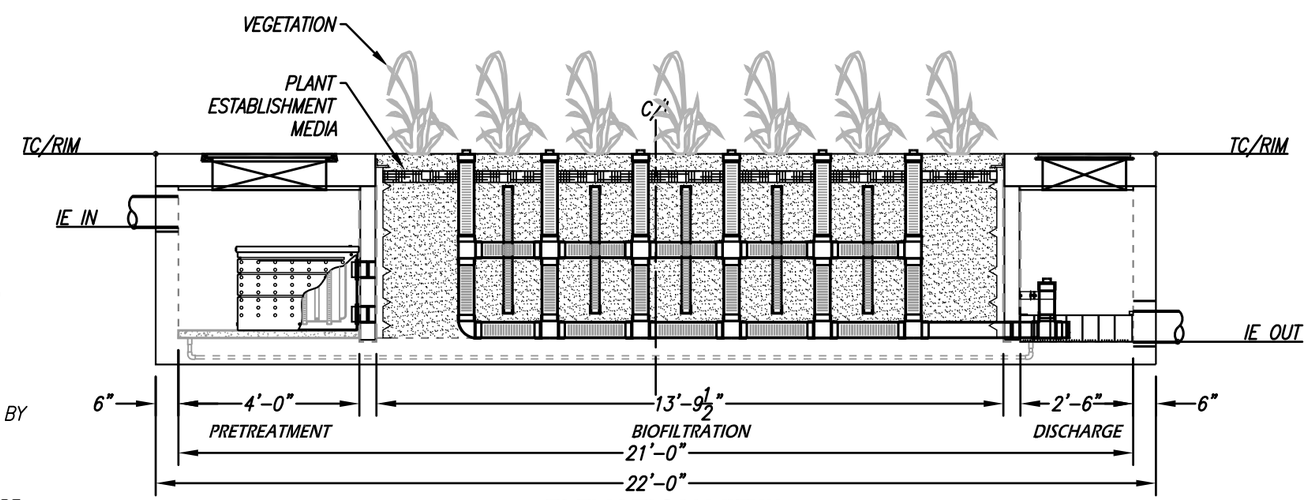

ELEVATION VIEW

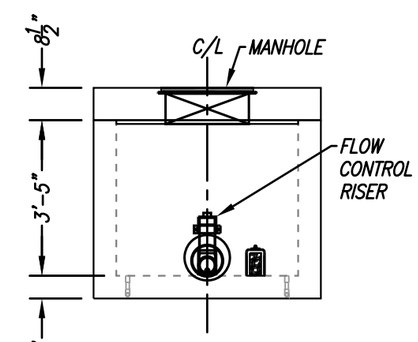

RIGHT END VIEW

INSTALLATION NOTES

1. CONTRACTOR TO PROVIDE ALL LABOR, EQUIPMENT, MATERIALS AND INCIDENTALS REQUIRED TO OFFLOAD AND INSTALL THE SYSTEM AND APPURTENANCES IN ACCORDANCE WITH THIS DRAWING AND THE MANUFACTURERS SPECIFICATIONS, UNLESS OTHERWISE STATED IN MANUFACTURERS CONTRACT.
2. UNIT MUST BE INSTALLED ON LEVEL BASE. MANUFACTURER RECOMMENDS A MINIMUM 6" LEVEL ROCK BASE UNLESS SPECIFIED BY THE PROJECT ENGINEER. CONTRACTOR IS RESPONSIBLE TO VERIFY PROJECT ENGINEERS RECOMMENDED BASE SPECIFICATIONS.
3. ALL PIPES MUST BE FLUSH WITH INSIDE SURFACE OF CONCRETE. (PIPES CANNOT INTRUDE BEYOND FLUSH). INVERT OF OUTFLOW PIPE MUST BE FLUSH WITH DISCHARGE CHAMBER FLOOR. ALL GAPS AROUND PIPES SHALL BE SEALED WATER TIGHT WITH A NON-SHRINK GROUT PER MANUFACTURERS STANDARD CONNECTION DETAIL AND SHALL MEET OR EXCEED REGIONAL PIPE CONNECTION STANDARDS.
4. CONTRACTOR TO SUPPLY AND INSTALL ALL EXTERNAL CONNECTING PIPES.
5. CONTRACTOR RESPONSIBLE FOR INSTALLATION OF ALL RISERS, MANHOLES, AND HATCHES. CONTRACTOR TO GROUT ALL MANHOLES AND HATCHES TO MATCH FINISHED SURFACE UNLESS SPECIFIED OTHERWISE.
6. DRIP OR SPRAY IRRIGATION REQUIRED ON ALL UNITS WITH VEGETATION.

GENERAL NOTES

1. MANUFACTURER TO PROVIDE ALL MATERIALS UNLESS OTHERWISE NOTED.
2. ALL DIMENSIONS, ELEVATIONS, SPECIFICATIONS AND CAPACITIES ARE SUBJECT TO CHANGE. FOR PROJECT SPECIFIC DRAWINGS DETAILING EXACT DIMENSIONS, WEIGHTS AND ACCESSORIES PLEASE CONTACT MANUFACTURER.

TREATMENT FLOW (CFS)	0.268
OPERATING HEAD (FT)	3.4
PRETREATMENT LOADING RATE (GPM/SF)	TBD
WETLAND MEDIA LOADING RATE (GPM/SF)	1.0

THE PRODUCT DESCRIBED MAY BE PROTECTED BY ONE OR MORE OF THE FOLLOWING US PATENTS: 7,425,262; 7,470,362; 7,674,378; 8,303,816; RELATED FOREIGN PATENTS OR OTHER PATENTS PENDING

PROPRIETARY AND CONFIDENTIAL:

THE INFORMATION CONTAINED IN THIS DRAWING IS THE SOLE PROPERTY OF MODULAR WETLANDS SYSTEMS. ANY REPRODUCTION IN PART OR AS A WHOLE WITHOUT THE WRITTEN PERMISSION OF MODULAR WETLANDS SYSTEMS IS PROHIBITED.

MODULAR WETLANDS
www.ModularWetlands.com | (855) 5MOD-WET

MWS-L-4-21-V
STORMWATER BIOFILTRATION SYSTEM STANDARD DETAIL

SITE SPECIFIC DATA			
PROJECT NAME		20-750 Meridian Upper Plateau	
PROJECT LOCATION		Riverside, CA	
STRUCTURE ID		2-4D	
TREATMENT REQUIRED			
VOLUME BASED (CF)		FLOW BASED (CFS)	
10,556			
TREATMENT HGL AVAILABLE (FT)			
PEAK BYPASS REQUIRED (CFS) – IF APPLICABLE			
PIPE DATA	I.E.	MATERIAL	DIAMETER
INLET PIPE 1			
INLET PIPE 2			
OUTLET PIPE			
	PRETREATMENT	BIOFILTRATION	DISCHARGE
RIM ELEVATION			
SURFACE LOAD	PARKWAY	OPEN PLANTER	PARKWAY
FRAME & COVER	ø30"	N/A	ø24"
WETLANDMEDIA VOLUME (CY)			7.63
WETLANDMEDIA DELIVERY METHOD			TBD
ORIFICE SIZE (DIA. INCHES)			ø2.34"
MAXIMUM PICK WEIGHT (LBS)			43000
NOTES:			

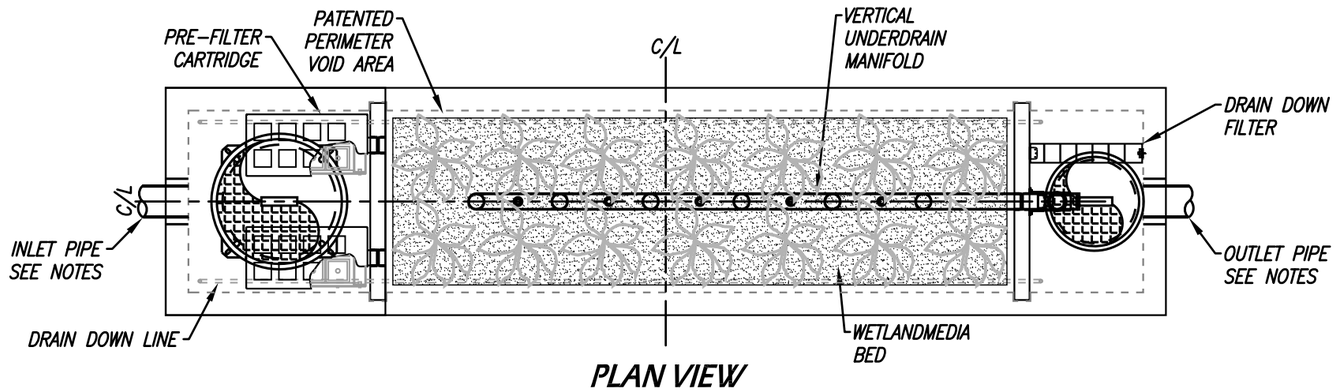

PLAN VIEW

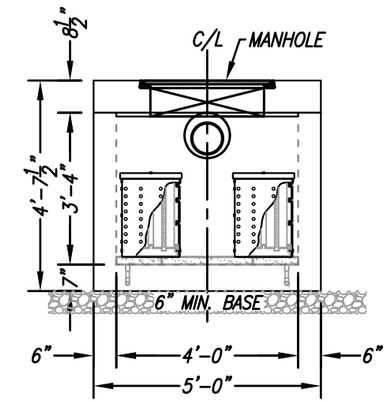

LEFT END VIEW

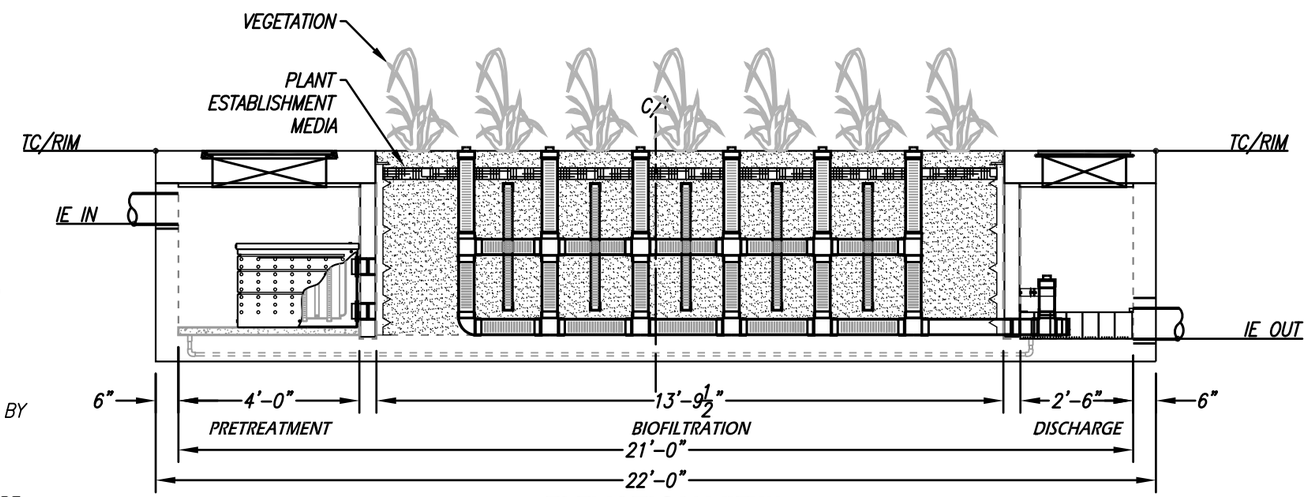

ELEVATION VIEW

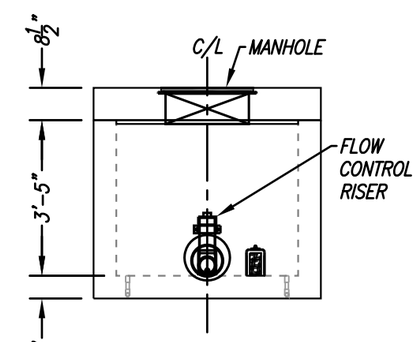

RIGHT END VIEW

INSTALLATION NOTES

1. CONTRACTOR TO PROVIDE ALL LABOR, EQUIPMENT, MATERIALS AND INCIDENTALS REQUIRED TO OFFLOAD AND INSTALL THE SYSTEM AND APPURTENANCES IN ACCORDANCE WITH THIS DRAWING AND THE MANUFACTURERS SPECIFICATIONS, UNLESS OTHERWISE STATED IN MANUFACTURERS CONTRACT.
2. UNIT MUST BE INSTALLED ON LEVEL BASE. MANUFACTURER RECOMMENDS A MINIMUM 6" LEVEL ROCK BASE UNLESS SPECIFIED BY THE PROJECT ENGINEER. CONTRACTOR IS RESPONSIBLE TO VERIFY PROJECT ENGINEERS RECOMMENDED BASE SPECIFICATIONS.
3. ALL PIPES MUST BE FLUSH WITH INSIDE SURFACE OF CONCRETE. (PIPES CANNOT INTRUDE BEYOND FLUSH). INVERT OF OUTFLOW PIPE MUST BE FLUSH WITH DISCHARGE CHAMBER FLOOR. ALL GAPS AROUND PIPES SHALL BE SEALED WATER TIGHT WITH A NON-SHRINK GROUT PER MANUFACTURERS STANDARD CONNECTION DETAIL AND SHALL MEET OR EXCEED REGIONAL PIPE CONNECTION STANDARDS.
4. CONTRACTOR TO SUPPLY AND INSTALL ALL EXTERNAL CONNECTING PIPES.
5. CONTRACTOR RESPONSIBLE FOR INSTALLATION OF ALL RISERS, MANHOLES, AND HATCHES. CONTRACTOR TO GROUT ALL MANHOLES AND HATCHES TO MATCH FINISHED SURFACE UNLESS SPECIFIED OTHERWISE.
6. DRIP OR SPRAY IRRIGATION REQUIRED ON ALL UNITS WITH VEGETATION.

GENERAL NOTES

1. MANUFACTURER TO PROVIDE ALL MATERIALS UNLESS OTHERWISE NOTED.
2. ALL DIMENSIONS, ELEVATIONS, SPECIFICATIONS AND CAPACITIES ARE SUBJECT TO CHANGE. FOR PROJECT SPECIFIC DRAWINGS DETAILING EXACT DIMENSIONS, WEIGHTS AND ACCESSORIES PLEASE CONTACT MANUFACTURER.

TREATMENT FLOW (CFS)	0.268
OPERATING HEAD (FT)	3.4
PRETREATMENT LOADING RATE (GPM/SF)	TBD
WETLAND MEDIA LOADING RATE (GPM/SF)	1.0

THE PRODUCT DESCRIBED MAY BE PROTECTED BY ONE OR MORE OF THE FOLLOWING US PATENTS: 7,425,262; 7,470,362; 7,674,378; 8,303,816; RELATED FOREIGN PATENTS OR OTHER PATENTS PENDING

PROPRIETARY AND CONFIDENTIAL:

THE INFORMATION CONTAINED IN THIS DRAWING IS THE SOLE PROPERTY OF MODULAR WETLANDS SYSTEMS. ANY REPRODUCTION IN PART OR AS A WHOLE WITHOUT THE WRITTEN PERMISSION OF MODULAR WETLANDS SYSTEMS IS PROHIBITED.

MODULAR WETLANDS
www.ModularWetlands.com | (855) 5MOD-WET

MWS-L-4-21-V
STORMWATER BIOFILTRATION SYSTEM STANDARD DETAIL

SITE SPECIFIC DATA			
PROJECT NAME		20-750 Meridian Upper Plateau	
PROJECT LOCATION		Riverside, CA	
STRUCTURE ID		2-5D	
TREATMENT REQUIRED			
VOLUME BASED (CF)		FLOW BASED (CFS)	
5,593			
TREATMENT HGL AVAILABLE (FT)			
PEAK BYPASS REQUIRED (CFS) – IF APPLICABLE			
PIPE DATA	I.E.	MATERIAL	DIAMETER
INLET PIPE 1			
INLET PIPE 2			
OUTLET PIPE			
	PRETREATMENT	BIOFILTRATION	DISCHARGE
RIM ELEVATION			
SURFACE LOAD	PARKWAY	OPEN PLANTER	PARKWAY
FRAME & COVER	ø30"	N/A	ø24"
WETLANDMEDIA VOLUME (CY)			4.30
WETLANDMEDIA DELIVERY METHOD			TBD
ORIFICE SIZE (DIA. INCHES)			ø1.89"
MAXIMUM PICK WEIGHT (LBS)			31000
NOTES:			

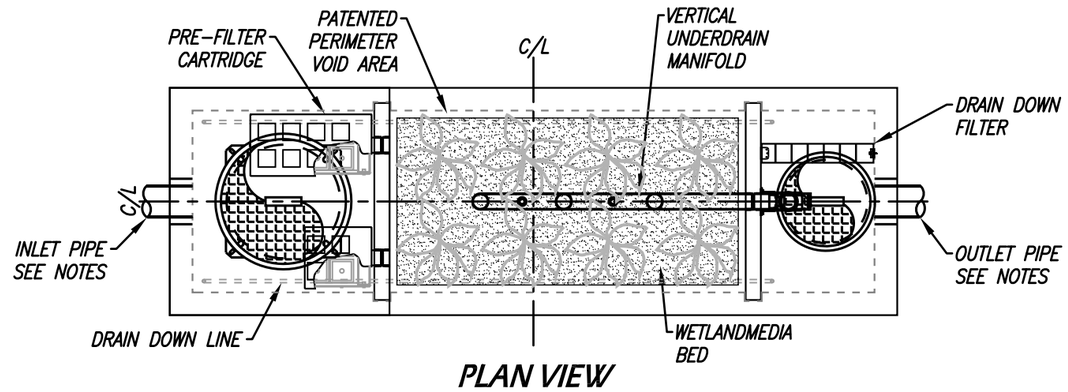

PLAN VIEW

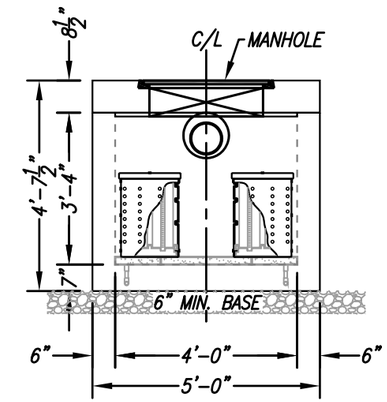

LEFT END VIEW

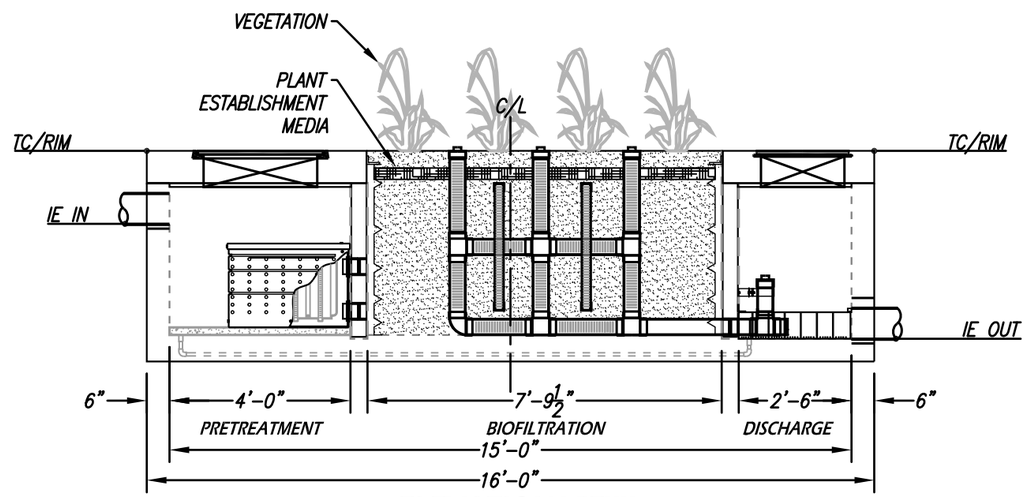

ELEVATION VIEW

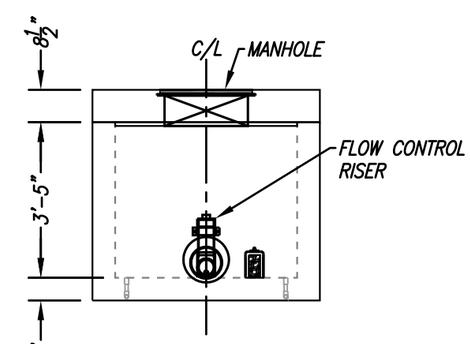

RIGHT END VIEW

INSTALLATION NOTES

1. CONTRACTOR TO PROVIDE ALL LABOR, EQUIPMENT, MATERIALS AND INCIDENTALS REQUIRED TO OFFLOAD AND INSTALL THE SYSTEM AND APPURTENANCES IN ACCORDANCE WITH THIS DRAWING AND THE MANUFACTURERS SPECIFICATIONS, UNLESS OTHERWISE STATED IN MANUFACTURERS CONTRACT.
2. UNIT MUST BE INSTALLED ON LEVEL BASE. MANUFACTURER RECOMMENDS A MINIMUM 6" LEVEL ROCK BASE UNLESS SPECIFIED BY THE PROJECT ENGINEER. CONTRACTOR IS RESPONSIBLE TO VERIFY PROJECT ENGINEERS RECOMMENDED BASE SPECIFICATIONS.
3. ALL PIPES MUST BE FLUSH WITH INSIDE SURFACE OF CONCRETE. (PIPES CANNOT INTRUDE BEYOND FLUSH). INVERT OF OUTFLOW PIPE MUST BE FLUSH WITH DISCHARGE CHAMBER FLOOR. ALL GAPS AROUND PIPES SHALL BE SEALED WATER TIGHT WITH A NON-SHRINK GROUT PER MANUFACTURERS STANDARD CONNECTION DETAIL AND SHALL MEET OR EXCEED REGIONAL PIPE CONNECTION STANDARDS.
4. CONTRACTOR TO SUPPLY AND INSTALL ALL EXTERNAL CONNECTING PIPES.
5. CONTRACTOR RESPONSIBLE FOR INSTALLATION OF ALL RISERS, MANHOLES, AND HATCHES. CONTRACTOR TO GROUT ALL MANHOLES AND HATCHES TO MATCH FINISHED SURFACE UNLESS SPECIFIED OTHERWISE.
6. DRIP OR SPRAY IRRIGATION REQUIRED ON ALL UNITS WITH VEGETATION.

GENERAL NOTES

1. MANUFACTURER TO PROVIDE ALL MATERIALS UNLESS OTHERWISE NOTED.
2. ALL DIMENSIONS, ELEVATIONS, SPECIFICATIONS AND CAPACITIES ARE SUBJECT TO CHANGE. FOR PROJECT SPECIFIC DRAWINGS DETAILING EXACT DIMENSIONS, WEIGHTS AND ACCESSORIES PLEASE CONTACT MANUFACTURER.

TREATMENT FLOW (CFS)	0.175
OPERATING HEAD (FT)	3.4
PRETREATMENT LOADING RATE (GPM/SF)	TBD
WETLAND MEDIA LOADING RATE (GPM/SF)	1.0

THE PRODUCT DESCRIBED MAY BE PROTECTED BY ONE OR MORE OF THE FOLLOWING US PATENTS: 7,425,262; 7,470,362; 7,674,378; 8,303,816; RELATED FOREIGN PATENTS OR OTHER PATENTS PENDING

PROPRIETARY AND CONFIDENTIAL:

THE INFORMATION CONTAINED IN THIS DRAWING IS THE SOLE PROPERTY OF MODULAR WETLANDS SYSTEMS. ANY REPRODUCTION IN PART OR AS A WHOLE WITHOUT THE WRITTEN PERMISSION OF MODULAR WETLANDS SYSTEMS IS PROHIBITED.

MODULAR WETLANDS
www.ModularWetlands.com | (855) 5MOD-WET

MWS-L-4-15-V
STORMWATER BIOFILTRATION SYSTEM STANDARD DETAIL

SITE SPECIFIC DATA			
PROJECT NAME		20-750 Meridian Upper Plateau	
PROJECT LOCATION		Riverside, CA	
STRUCTURE ID		2-6D	
TREATMENT REQUIRED			
VOLUME BASED (CF)		FLOW BASED (CFS)	
6,274			
TREATMENT HGL AVAILABLE (FT)			
PEAK BYPASS REQUIRED (CFS) – IF APPLICABLE			
PIPE DATA	I.E.	MATERIAL	DIAMETER
INLET PIPE 1			
INLET PIPE 2			
OUTLET PIPE			
	PRETREATMENT	BIOFILTRATION	DISCHARGE
RIM ELEVATION			
SURFACE LOAD	PARKWAY	OPEN PLANTER	PARKWAY
FRAME & COVER	ø30"	N/A	ø24"
WETLANDMEDIA VOLUME (CY)			5.41
WETLANDMEDIA DELIVERY METHOD			TBD
ORIFICE SIZE (DIA. INCHES)			ø2.05"
MAXIMUM PICK WEIGHT (LBS)			36000
NOTES:			

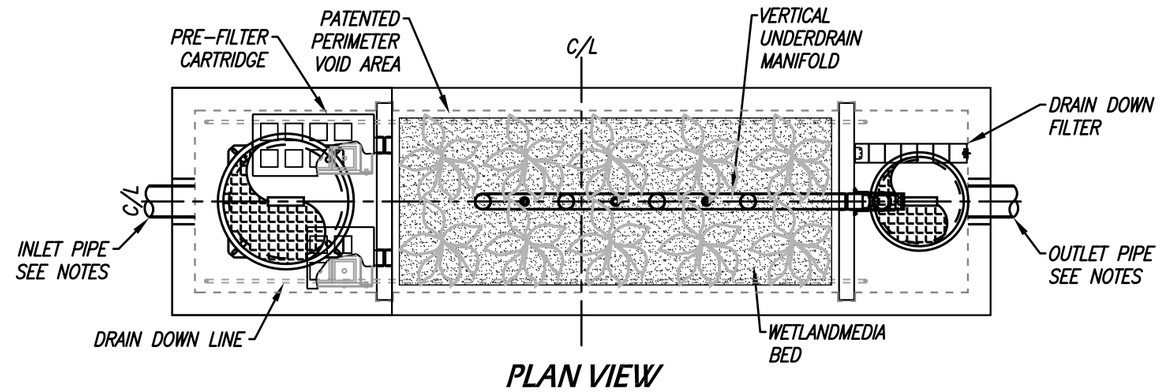

PLAN VIEW

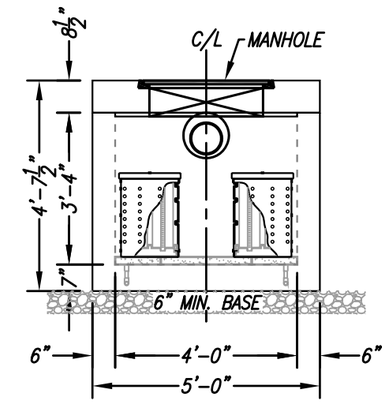

LEFT END VIEW

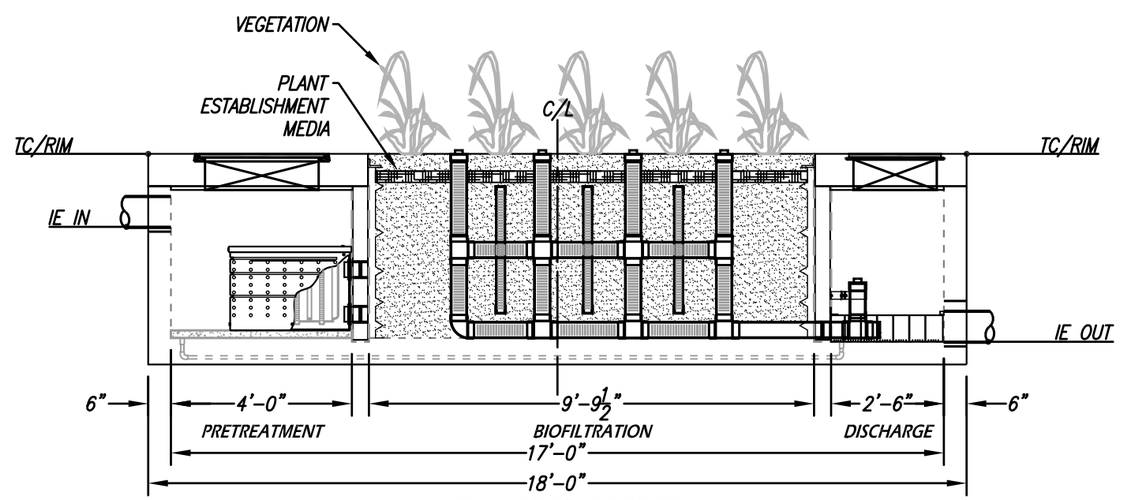

ELEVATION VIEW

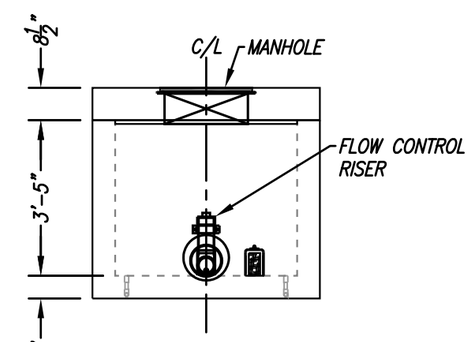

RIGHT END VIEW

INSTALLATION NOTES

1. CONTRACTOR TO PROVIDE ALL LABOR, EQUIPMENT, MATERIALS AND INCIDENTALS REQUIRED TO OFFLOAD AND INSTALL THE SYSTEM AND APPURTENANCES IN ACCORDANCE WITH THIS DRAWING AND THE MANUFACTURERS SPECIFICATIONS, UNLESS OTHERWISE STATED IN MANUFACTURERS CONTRACT.
2. UNIT MUST BE INSTALLED ON LEVEL BASE. MANUFACTURER RECOMMENDS A MINIMUM 6" LEVEL ROCK BASE UNLESS SPECIFIED BY THE PROJECT ENGINEER. CONTRACTOR IS RESPONSIBLE TO VERIFY PROJECT ENGINEERS RECOMMENDED BASE SPECIFICATIONS.
3. ALL PIPES MUST BE FLUSH WITH INSIDE SURFACE OF CONCRETE. (PIPES CANNOT INTRUDE BEYOND FLUSH). INVERT OF OUTFLOW PIPE MUST BE FLUSH WITH DISCHARGE CHAMBER FLOOR. ALL GAPS AROUND PIPES SHALL BE SEALED WATER TIGHT WITH A NON-SHRINK GROUT PER MANUFACTURERS STANDARD CONNECTION DETAIL AND SHALL MEET OR EXCEED REGIONAL PIPE CONNECTION STANDARDS.
4. CONTRACTOR TO SUPPLY AND INSTALL ALL EXTERNAL CONNECTING PIPES.
5. CONTRACTOR RESPONSIBLE FOR INSTALLATION OF ALL RISERS, MANHOLES, AND HATCHES. CONTRACTOR TO GROUT ALL MANHOLES AND HATCHES TO MATCH FINISHED SURFACE UNLESS SPECIFIED OTHERWISE.
6. DRIP OR SPRAY IRRIGATION REQUIRED ON ALL UNITS WITH VEGETATION.

GENERAL NOTES

1. MANUFACTURER TO PROVIDE ALL MATERIALS UNLESS OTHERWISE NOTED.
2. ALL DIMENSIONS, ELEVATIONS, SPECIFICATIONS AND CAPACITIES ARE SUBJECT TO CHANGE. FOR PROJECT SPECIFIC DRAWINGS DETAILING EXACT DIMENSIONS, WEIGHTS AND ACCESSORIES PLEASE CONTACT MANUFACTURER.

TREATMENT FLOW (CFS)	0.206
OPERATING HEAD (FT)	3.4
PRETREATMENT LOADING RATE (GPM/SF)	TBD
WETLAND MEDIA LOADING RATE (GPM/SF)	1.0

THE PRODUCT DESCRIBED MAY BE PROTECTED BY ONE OR MORE OF THE FOLLOWING US PATENTS: 7,425,262; 7,470,362; 7,674,378; 8,303,816; RELATED FOREIGN PATENTS OR OTHER PATENTS PENDING

PROPRIETARY AND CONFIDENTIAL:

THE INFORMATION CONTAINED IN THIS DRAWING IS THE SOLE PROPERTY OF MODULAR WETLANDS SYSTEMS. ANY REPRODUCTION IN PART OR AS A WHOLE WITHOUT THE WRITTEN PERMISSION OF MODULAR WETLANDS SYSTEMS IS PROHIBITED.

MODULAR WETLANDS
www.ModularWetlands.com | (855) 5MOD-WET

MWS-L-4-17-V
STORMWATER BIOFILTRATION SYSTEM STANDARD DETAIL

SITE SPECIFIC DATA			
PROJECT NAME		20-750 Meridian Upper Plateau	
PROJECT LOCATION		Riverside, CA	
STRUCTURE ID		2-7D	
TREATMENT REQUIRED			
VOLUME BASED (CF)		FLOW BASED (CFS)	
4,435			
TREATMENT HGL AVAILABLE (FT)			
PEAK BYPASS REQUIRED (CFS) – IF APPLICABLE			
PIPE DATA	I.E.	MATERIAL	DIAMETER
INLET PIPE 1			
INLET PIPE 2			
OUTLET PIPE			
	PRETREATMENT	BIOFILTRATION	DISCHARGE
RIM ELEVATION			
SURFACE LOAD	PARKWAY	OPEN PLANTER	PARKWAY
FRAME & COVER	ø30"	N/A	ø24"
WETLANDMEDIA VOLUME (CY)			3.05
WETLANDMEDIA DELIVERY METHOD			TBD
ORIFICE SIZE (DIA. INCHES)			ø1.71"
MAXIMUM PICK WEIGHT (LBS)			27000
NOTES:			

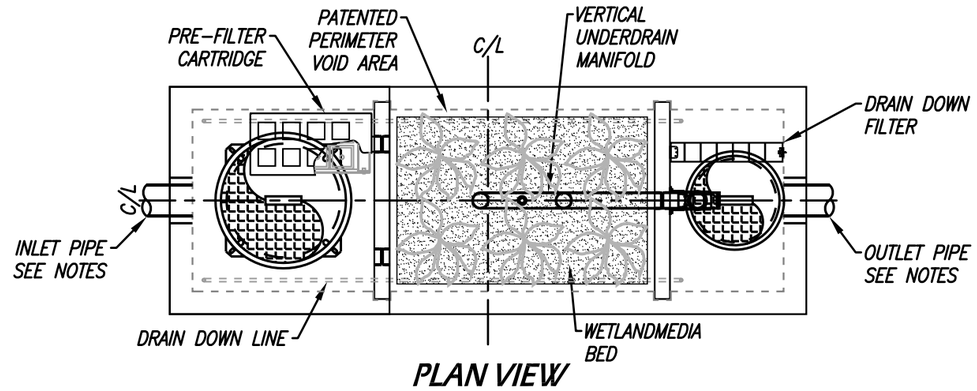

PLAN VIEW

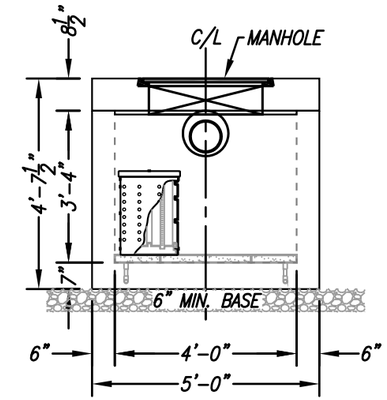

LEFT END VIEW

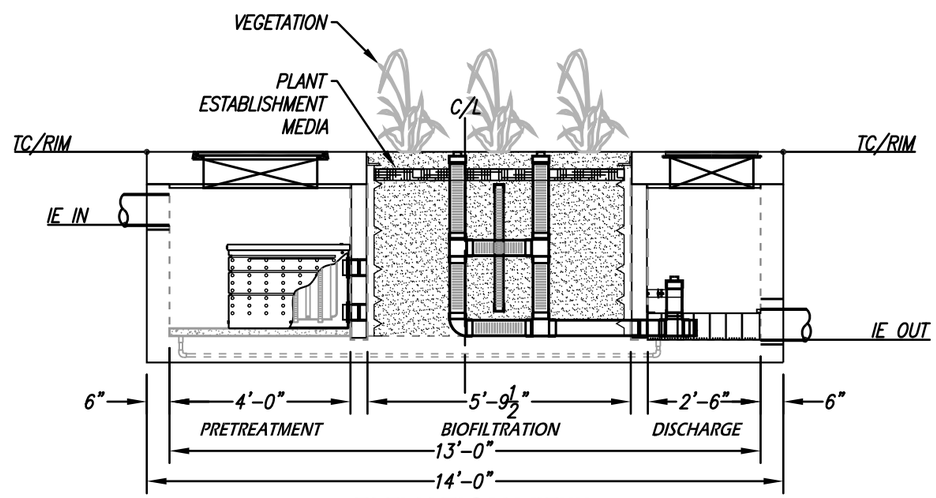

ELEVATION VIEW

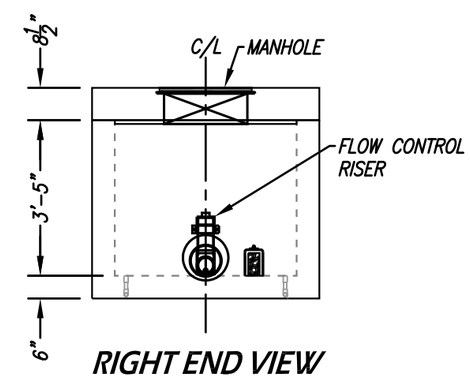

RIGHT END VIEW

INSTALLATION NOTES

1. CONTRACTOR TO PROVIDE ALL LABOR, EQUIPMENT, MATERIALS AND INCIDENTALS REQUIRED TO OFFLOAD AND INSTALL THE SYSTEM AND APPURTENANCES IN ACCORDANCE WITH THIS DRAWING AND THE MANUFACTURERS SPECIFICATIONS, UNLESS OTHERWISE STATED IN MANUFACTURERS CONTRACT.
2. UNIT MUST BE INSTALLED ON LEVEL BASE. MANUFACTURER RECOMMENDS A MINIMUM 6" LEVEL ROCK BASE UNLESS SPECIFIED BY THE PROJECT ENGINEER. CONTRACTOR IS RESPONSIBLE TO VERIFY PROJECT ENGINEERS RECOMMENDED BASE SPECIFICATIONS.
3. ALL PIPES MUST BE FLUSH WITH INSIDE SURFACE OF CONCRETE. (PIPES CANNOT INTRUDE BEYOND FLUSH). INVERT OF OUTFLOW PIPE MUST BE FLUSH WITH DISCHARGE CHAMBER FLOOR. ALL GAPS AROUND PIPES SHALL BE SEALED WATER TIGHT WITH A NON-SHRINK GROUT PER MANUFACTURERS STANDARD CONNECTION DETAIL AND SHALL MEET OR EXCEED REGIONAL PIPE CONNECTION STANDARDS.
4. CONTRACTOR TO SUPPLY AND INSTALL ALL EXTERNAL CONNECTING PIPES.
5. CONTRACTOR RESPONSIBLE FOR INSTALLATION OF ALL RISERS, MANHOLES, AND HATCHES. CONTRACTOR TO GROUT ALL MANHOLES AND HATCHES TO MATCH FINISHED SURFACE UNLESS SPECIFIED OTHERWISE.
6. DRIP OR SPRAY IRRIGATION REQUIRED ON ALL UNITS WITH VEGETATION.

GENERAL NOTES

1. MANUFACTURER TO PROVIDE ALL MATERIALS UNLESS OTHERWISE NOTED.
2. ALL DIMENSIONS, ELEVATIONS, SPECIFICATIONS AND CAPACITIES ARE SUBJECT TO CHANGE. FOR PROJECT SPECIFIC DRAWINGS DETAILING EXACT DIMENSIONS, WEIGHTS AND ACCESSORIES PLEASE CONTACT MANUFACTURER.

TREATMENT FLOW (CFS)	0.144
OPERATING HEAD (FT)	3.4
PRETREATMENT LOADING RATE (GPM/SF)	TBD
WETLAND MEDIA LOADING RATE (GPM/SF)	1.0

THE PRODUCT DESCRIBED MAY BE PROTECTED BY ONE OR MORE OF THE FOLLOWING US PATENTS: 7,425,262; 7,470,362; 7,674,378; 8,303,816; RELATED FOREIGN PATENTS OR OTHER PATENTS PENDING

PROPRIETARY AND CONFIDENTIAL:

THE INFORMATION CONTAINED IN THIS DRAWING IS THE SOLE PROPERTY OF MODULAR WETLANDS SYSTEMS. ANY REPRODUCTION IN PART OR AS A WHOLE WITHOUT THE WRITTEN PERMISSION OF MODULAR WETLANDS SYSTEMS IS PROHIBITED.

MODULAR WETLANDS
www.ModularWetlands.com | (855) 5MOD-WET

MWS-L-4-13-V
STORMWATER BIOFILTRATION SYSTEM STANDARD DETAIL

SITE SPECIFIC DATA			
PROJECT NAME		20-750 Meridian Upper Plateau	
PROJECT LOCATION		Riverside, CA	
STRUCTURE ID		2-8D	
TREATMENT REQUIRED			
VOLUME BASED (CF)		FLOW BASED (CFS)	
4,437			
TREATMENT HGL AVAILABLE (FT)			
PEAK BYPASS REQUIRED (CFS) – IF APPLICABLE			
PIPE DATA	I.E.	MATERIAL	DIAMETER
INLET PIPE 1			
INLET PIPE 2			
OUTLET PIPE			
	PRETREATMENT	BIOFILTRATION	DISCHARGE
RIM ELEVATION			
SURFACE LOAD	PARKWAY	OPEN PLANTER	PARKWAY
FRAME & COVER	ø30"	N/A	ø24"
WETLANDMEDIA VOLUME (CY)			3.05
WETLANDMEDIA DELIVERY METHOD			TBD
ORIFICE SIZE (DIA. INCHES)			ø1.71"
MAXIMUM PICK WEIGHT (LBS)			27000
NOTES:			

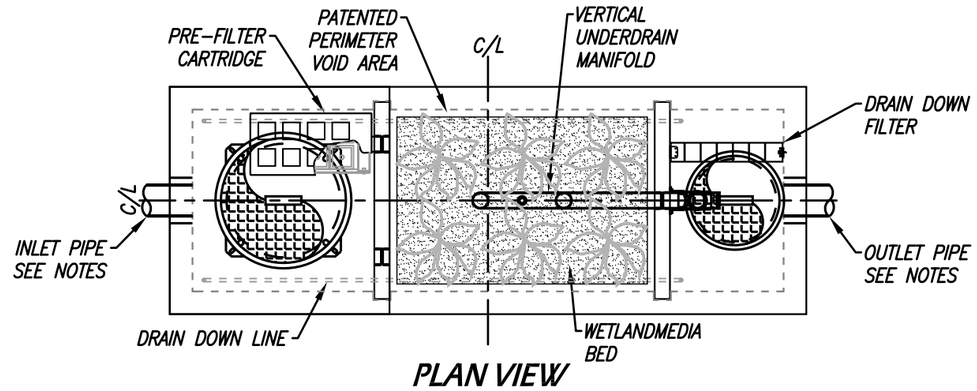

PLAN VIEW

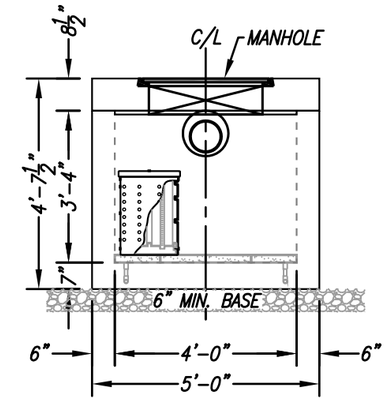

LEFT END VIEW

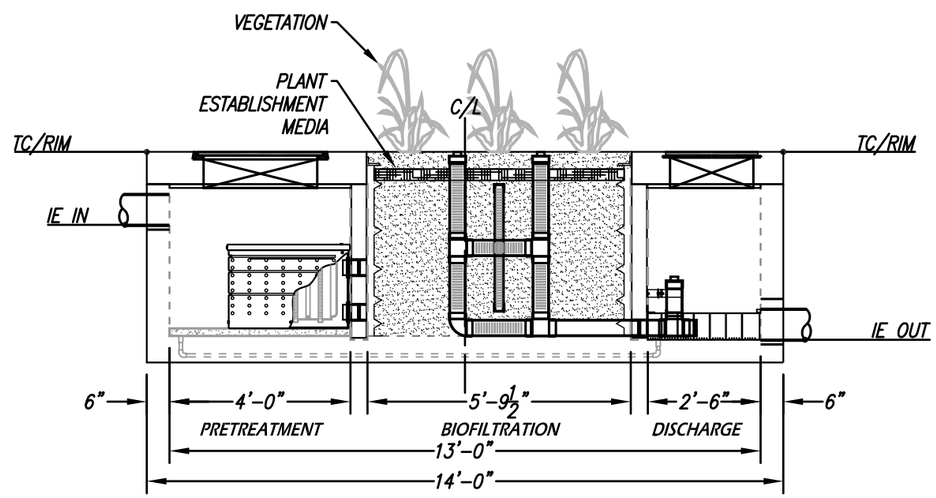

ELEVATION VIEW

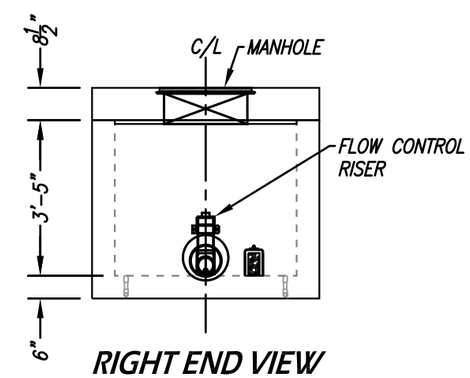

RIGHT END VIEW

INSTALLATION NOTES

1. CONTRACTOR TO PROVIDE ALL LABOR, EQUIPMENT, MATERIALS AND INCIDENTALS REQUIRED TO OFFLOAD AND INSTALL THE SYSTEM AND APPURTENANCES IN ACCORDANCE WITH THIS DRAWING AND THE MANUFACTURERS SPECIFICATIONS, UNLESS OTHERWISE STATED IN MANUFACTURERS CONTRACT.
2. UNIT MUST BE INSTALLED ON LEVEL BASE. MANUFACTURER RECOMMENDS A MINIMUM 6" LEVEL ROCK BASE UNLESS SPECIFIED BY THE PROJECT ENGINEER. CONTRACTOR IS RESPONSIBLE TO VERIFY PROJECT ENGINEERS RECOMMENDED BASE SPECIFICATIONS.
3. ALL PIPES MUST BE FLUSH WITH INSIDE SURFACE OF CONCRETE. (PIPES CANNOT INTRUDE BEYOND FLUSH). INVERT OF OUTFLOW PIPE MUST BE FLUSH WITH DISCHARGE CHAMBER FLOOR. ALL GAPS AROUND PIPES SHALL BE SEALED WATER TIGHT WITH A NON-SHRINK GROUT PER MANUFACTURERS STANDARD CONNECTION DETAIL AND SHALL MEET OR EXCEED REGIONAL PIPE CONNECTION STANDARDS.
4. CONTRACTOR TO SUPPLY AND INSTALL ALL EXTERNAL CONNECTING PIPES.
5. CONTRACTOR RESPONSIBLE FOR INSTALLATION OF ALL RISERS, MANHOLES, AND HATCHES. CONTRACTOR TO GROUT ALL MANHOLES AND HATCHES TO MATCH FINISHED SURFACE UNLESS SPECIFIED OTHERWISE.
6. DRIP OR SPRAY IRRIGATION REQUIRED ON ALL UNITS WITH VEGETATION.

GENERAL NOTES

1. MANUFACTURER TO PROVIDE ALL MATERIALS UNLESS OTHERWISE NOTED.
2. ALL DIMENSIONS, ELEVATIONS, SPECIFICATIONS AND CAPACITIES ARE SUBJECT TO CHANGE. FOR PROJECT SPECIFIC DRAWINGS DETAILING EXACT DIMENSIONS, WEIGHTS AND ACCESSORIES PLEASE CONTACT MANUFACTURER.

TREATMENT FLOW (CFS)	0.144
OPERATING HEAD (FT)	3.4
PRETREATMENT LOADING RATE (GPM/SF)	TBD
WETLAND MEDIA LOADING RATE (GPM/SF)	1.0

THE PRODUCT DESCRIBED MAY BE PROTECTED BY ONE OR MORE OF THE FOLLOWING US PATENTS: 7,425,262; 7,470,362; 7,674,378; 8,303,816; RELATED FOREIGN PATENTS OR OTHER PATENTS PENDING

PROPRIETARY AND CONFIDENTIAL:

THE INFORMATION CONTAINED IN THIS DRAWING IS THE SOLE PROPERTY OF MODULAR WETLANDS SYSTEMS. ANY REPRODUCTION IN PART OR AS A WHOLE WITHOUT THE WRITTEN PERMISSION OF MODULAR WETLANDS SYSTEMS IS PROHIBITED.

MODULAR WETLANDS
www.ModularWetlands.com | (855) 5MOD-WET

MWS-L-4-13-V
STORMWATER BIOFILTRATION SYSTEM STANDARD DETAIL

SITE SPECIFIC DATA			
PROJECT NAME		20-750 Meridian Upper Plateau	
PROJECT LOCATION		Riverside, CA	
STRUCTURE ID		2-9D	
TREATMENT REQUIRED			
VOLUME BASED (CF)		FLOW BASED (CFS)	
5,550			
TREATMENT HGL AVAILABLE (FT)			
PEAK BYPASS REQUIRED (CFS) – IF APPLICABLE			
PIPE DATA	I.E.	MATERIAL	DIAMETER
INLET PIPE 1			
INLET PIPE 2			
OUTLET PIPE			
	PRETREATMENT	BIOFILTRATION	DISCHARGE
RIM ELEVATION			
SURFACE LOAD	PARKWAY	OPEN PLANTER	PARKWAY
FRAME & COVER	ø30"	N/A	ø24"
WETLANDMEDIA VOLUME (CY)			4.30
WETLANDMEDIA DELIVERY METHOD			TBD
ORIFICE SIZE (DIA. INCHES)			ø1.89"
MAXIMUM PICK WEIGHT (LBS)			31000
NOTES:			

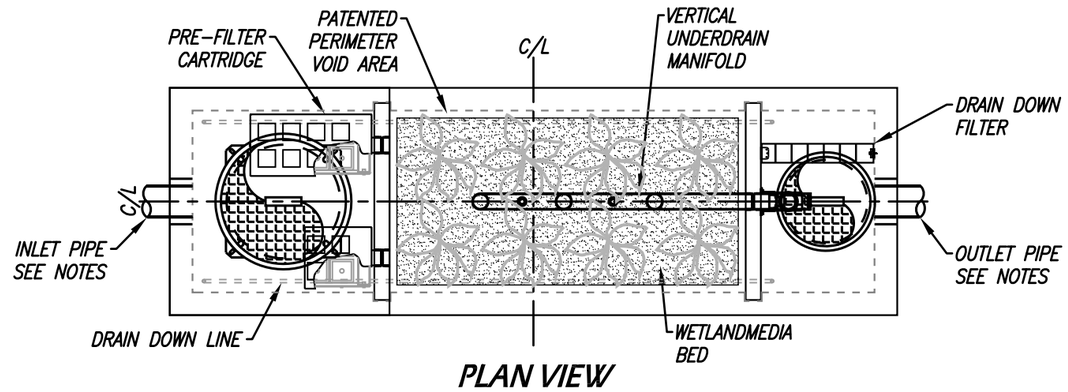

PLAN VIEW

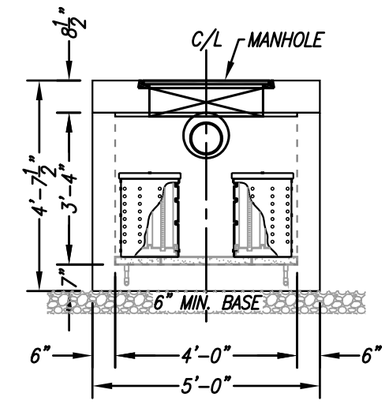

LEFT END VIEW

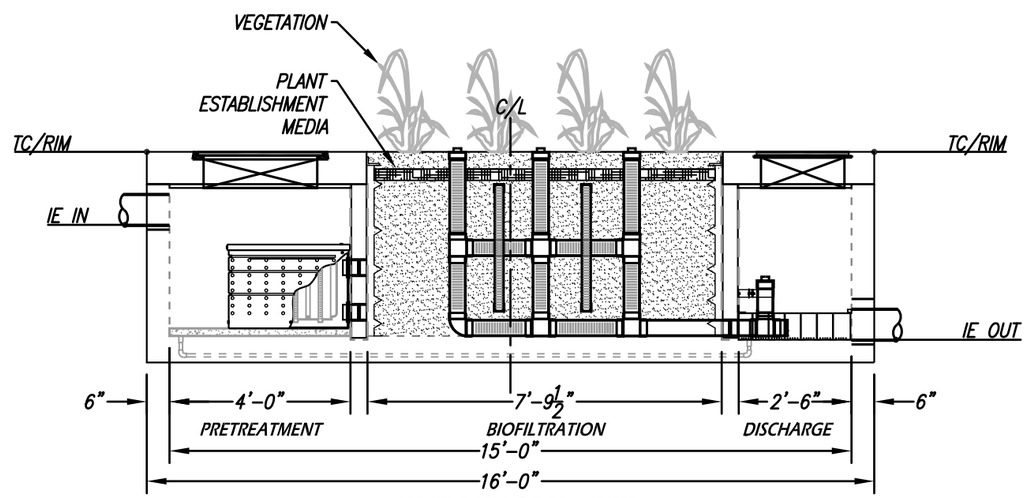

ELEVATION VIEW

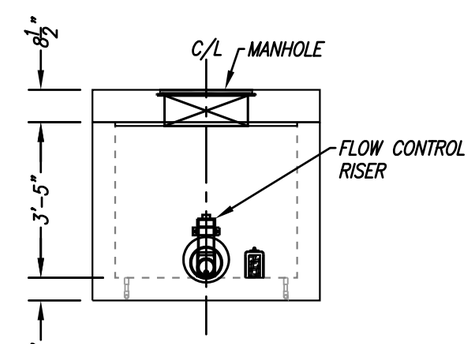

RIGHT END VIEW

INSTALLATION NOTES

1. CONTRACTOR TO PROVIDE ALL LABOR, EQUIPMENT, MATERIALS AND INCIDENTALS REQUIRED TO OFFLOAD AND INSTALL THE SYSTEM AND APPURTENANCES IN ACCORDANCE WITH THIS DRAWING AND THE MANUFACTURERS SPECIFICATIONS, UNLESS OTHERWISE STATED IN MANUFACTURERS CONTRACT.
2. UNIT MUST BE INSTALLED ON LEVEL BASE. MANUFACTURER RECOMMENDS A MINIMUM 6" LEVEL ROCK BASE UNLESS SPECIFIED BY THE PROJECT ENGINEER. CONTRACTOR IS RESPONSIBLE TO VERIFY PROJECT ENGINEERS RECOMMENDED BASE SPECIFICATIONS.
3. ALL PIPES MUST BE FLUSH WITH INSIDE SURFACE OF CONCRETE. (PIPES CANNOT INTRUDE BEYOND FLUSH). INVERT OF OUTFLOW PIPE MUST BE FLUSH WITH DISCHARGE CHAMBER FLOOR. ALL GAPS AROUND PIPES SHALL BE SEALED WATER TIGHT WITH A NON-SHRINK GROUT PER MANUFACTURERS STANDARD CONNECTION DETAIL AND SHALL MEET OR EXCEED REGIONAL PIPE CONNECTION STANDARDS.
4. CONTRACTOR TO SUPPLY AND INSTALL ALL EXTERNAL CONNECTING PIPES.
5. CONTRACTOR RESPONSIBLE FOR INSTALLATION OF ALL RISERS, MANHOLES, AND HATCHES. CONTRACTOR TO GROUT ALL MANHOLES AND HATCHES TO MATCH FINISHED SURFACE UNLESS SPECIFIED OTHERWISE.
6. DRIP OR SPRAY IRRIGATION REQUIRED ON ALL UNITS WITH VEGETATION.

GENERAL NOTES

1. MANUFACTURER TO PROVIDE ALL MATERIALS UNLESS OTHERWISE NOTED.
2. ALL DIMENSIONS, ELEVATIONS, SPECIFICATIONS AND CAPACITIES ARE SUBJECT TO CHANGE. FOR PROJECT SPECIFIC DRAWINGS DETAILING EXACT DIMENSIONS, WEIGHTS AND ACCESSORIES PLEASE CONTACT MANUFACTURER.

TREATMENT FLOW (CFS)	0.175
OPERATING HEAD (FT)	3.4
PRETREATMENT LOADING RATE (GPM/SF)	TBD
WETLAND MEDIA LOADING RATE (GPM/SF)	1.0

THE PRODUCT DESCRIBED MAY BE PROTECTED BY ONE OR MORE OF THE FOLLOWING US PATENTS: 7,425,262; 7,470,362; 7,674,378; 8,303,816; RELATED FOREIGN PATENTS OR OTHER PATENTS PENDING

PROPRIETARY AND CONFIDENTIAL:

THE INFORMATION CONTAINED IN THIS DRAWING IS THE SOLE PROPERTY OF MODULAR WETLANDS SYSTEMS. ANY REPRODUCTION IN PART OR AS A WHOLE WITHOUT THE WRITTEN PERMISSION OF MODULAR WETLANDS SYSTEMS IS PROHIBITED.

MODULAR WETLANDS
www.ModularWetlands.com | (855) 5MOD-WET

MWS-L-4-15-V
STORMWATER BIOFILTRATION SYSTEM STANDARD DETAIL

SITE SPECIFIC DATA			
PROJECT NAME		20-750 Meridian Upper Plateau	
PROJECT LOCATION		Riverside, CA	
STRUCTURE ID		2-10D	
TREATMENT REQUIRED			
VOLUME BASED (CF)		FLOW BASED (CFS)	
5,548			
TREATMENT HGL AVAILABLE (FT)			
PEAK BYPASS REQUIRED (CFS) – IF APPLICABLE			
PIPE DATA	I.E.	MATERIAL	DIAMETER
INLET PIPE 1			
INLET PIPE 2			
OUTLET PIPE			
	PRETREATMENT	BIOFILTRATION	DISCHARGE
RIM ELEVATION			
SURFACE LOAD	PARKWAY	OPEN PLANTER	PARKWAY
FRAME & COVER	ø30"	N/A	ø24"
WETLANDMEDIA VOLUME (CY)			4.30
WETLANDMEDIA DELIVERY METHOD			TBD
ORIFICE SIZE (DIA. INCHES)			ø1.89"
MAXIMUM PICK WEIGHT (LBS)			31000
NOTES:			

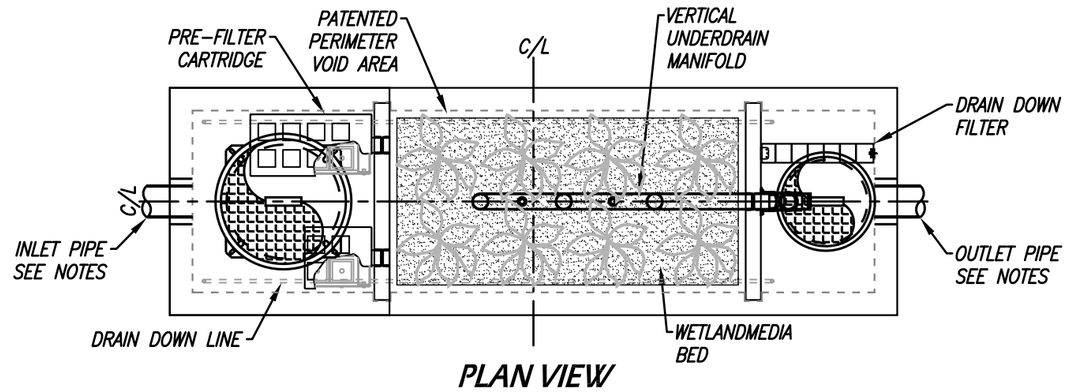

PLAN VIEW

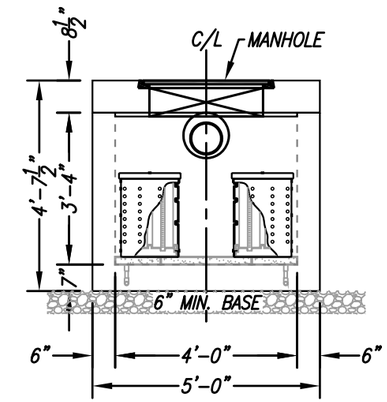

LEFT END VIEW

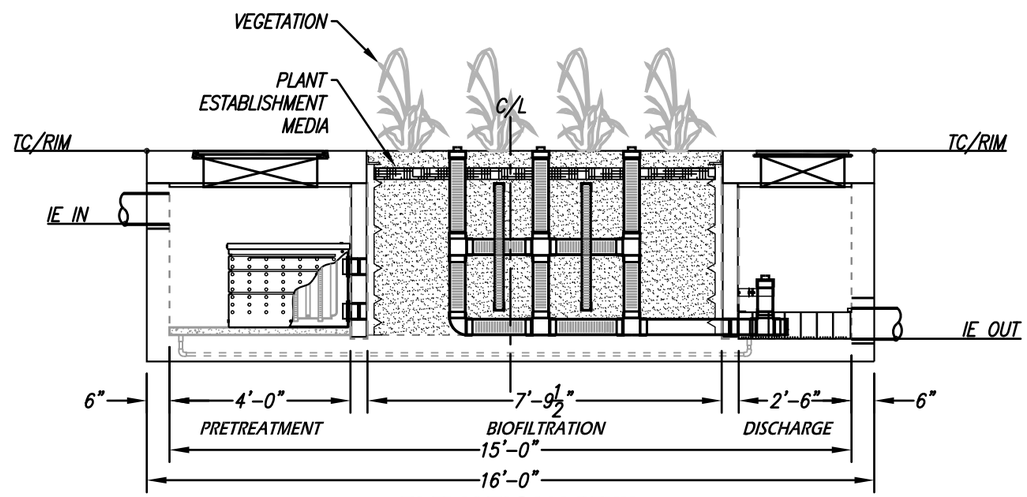

ELEVATION VIEW

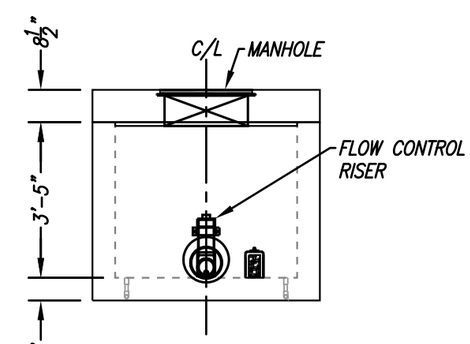

RIGHT END VIEW

INSTALLATION NOTES

1. CONTRACTOR TO PROVIDE ALL LABOR, EQUIPMENT, MATERIALS AND INCIDENTALS REQUIRED TO OFFLOAD AND INSTALL THE SYSTEM AND APPURTENANCES IN ACCORDANCE WITH THIS DRAWING AND THE MANUFACTURERS SPECIFICATIONS, UNLESS OTHERWISE STATED IN MANUFACTURERS CONTRACT.
2. UNIT MUST BE INSTALLED ON LEVEL BASE. MANUFACTURER RECOMMENDS A MINIMUM 6" LEVEL ROCK BASE UNLESS SPECIFIED BY THE PROJECT ENGINEER. CONTRACTOR IS RESPONSIBLE TO VERIFY PROJECT ENGINEERS RECOMMENDED BASE SPECIFICATIONS.
3. ALL PIPES MUST BE FLUSH WITH INSIDE SURFACE OF CONCRETE. (PIPES CANNOT INTRUDE BEYOND FLUSH). INVERT OF OUTFLOW PIPE MUST BE FLUSH WITH DISCHARGE CHAMBER FLOOR. ALL GAPS AROUND PIPES SHALL BE SEALED WATER TIGHT WITH A NON-SHRINK GROUT PER MANUFACTURERS STANDARD CONNECTION DETAIL AND SHALL MEET OR EXCEED REGIONAL PIPE CONNECTION STANDARDS.
4. CONTRACTOR TO SUPPLY AND INSTALL ALL EXTERNAL CONNECTING PIPES.
5. CONTRACTOR RESPONSIBLE FOR INSTALLATION OF ALL RISERS, MANHOLES, AND HATCHES. CONTRACTOR TO GROUT ALL MANHOLES AND HATCHES TO MATCH FINISHED SURFACE UNLESS SPECIFIED OTHERWISE.
6. DRIP OR SPRAY IRRIGATION REQUIRED ON ALL UNITS WITH VEGETATION.

GENERAL NOTES

1. MANUFACTURER TO PROVIDE ALL MATERIALS UNLESS OTHERWISE NOTED.
2. ALL DIMENSIONS, ELEVATIONS, SPECIFICATIONS AND CAPACITIES ARE SUBJECT TO CHANGE. FOR PROJECT SPECIFIC DRAWINGS DETAILING EXACT DIMENSIONS, WEIGHTS AND ACCESSORIES PLEASE CONTACT MANUFACTURER.

TREATMENT FLOW (CFS)	0.175
OPERATING HEAD (FT)	3.4
PRETREATMENT LOADING RATE (GPM/SF)	TBD
WETLAND MEDIA LOADING RATE (GPM/SF)	1.0

THE PRODUCT DESCRIBED MAY BE PROTECTED BY ONE OR MORE OF THE FOLLOWING US PATENTS: 7,425,262; 7,470,362; 7,674,378; 8,303,816; RELATED FOREIGN PATENTS OR OTHER PATENTS PENDING

PROPRIETARY AND CONFIDENTIAL:

THE INFORMATION CONTAINED IN THIS DRAWING IS THE SOLE PROPERTY OF MODULAR WETLANDS SYSTEMS. ANY REPRODUCTION IN PART OR AS A WHOLE WITHOUT THE WRITTEN PERMISSION OF MODULAR WETLANDS SYSTEMS IS PROHIBITED.

MODULAR WETLANDS
www.ModularWetlands.com | (855) 5MOD-WET

MWS-L-4-15-V
STORMWATER BIOFILTRATION SYSTEM STANDARD DETAIL

SITE SPECIFIC DATA			
PROJECT NAME		20-750 Meridian Upper Plateau	
PROJECT LOCATION		Riverside, CA	
STRUCTURE ID		2-11D	
TREATMENT REQUIRED			
VOLUME BASED (CF)		FLOW BASED (CFS)	
1,566			
TREATMENT HGL AVAILABLE (FT)			
PEAK BYPASS REQUIRED (CFS) – IF APPLICABLE			
PIPE DATA	I.E.	MATERIAL	DIAMETER
INLET PIPE 1			
INLET PIPE 2			
OUTLET PIPE			
	PRETREATMENT	BIOFILTRATION	DISCHARGE
RIM ELEVATION			
SURFACE LOAD	PARKWAY	OPEN PLANTER	PARKWAY
FRAME & COVER	30" X 36"	N/A	N/A
WETLANDMEDIA VOLUME (CY)			1.48
WETLANDMEDIA DELIVERY METHOD			TBD
ORIFICE SIZE (DIA. INCHES)			ø1.22"
MAXIMUM PICK WEIGHT (LBS)			TBD
NOTES:			

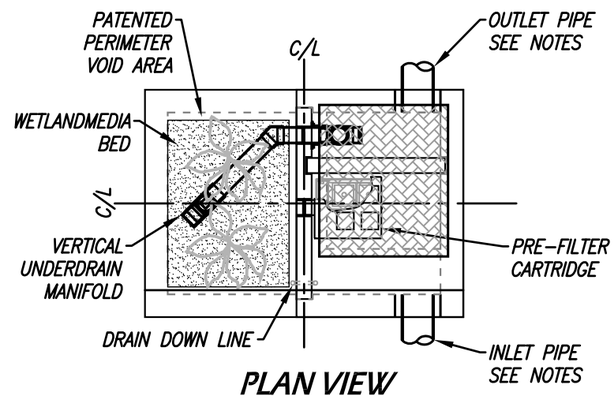

PLAN VIEW

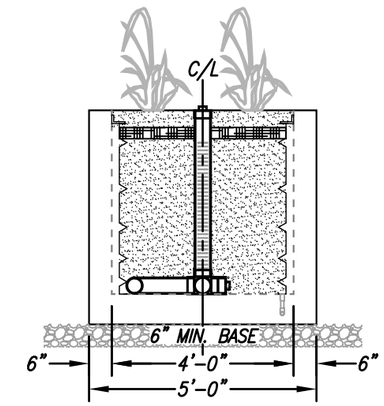

LEFT END VIEW
BIOFILTRATION

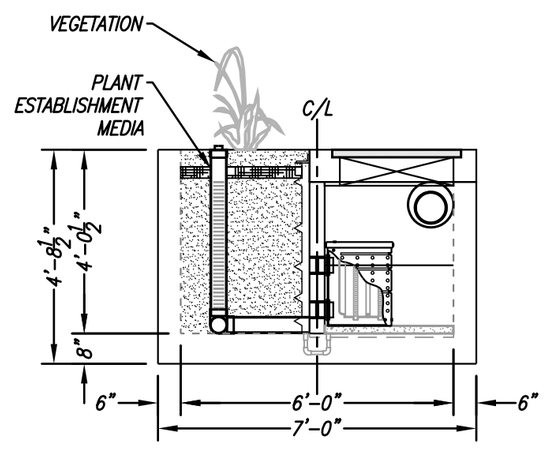

ELEVATION VIEW

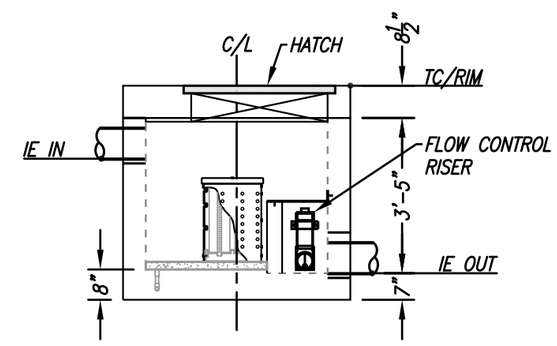

RIGHT END VIEW
PRETREATMENT/DISCHARGE

INSTALLATION NOTES

1. CONTRACTOR TO PROVIDE ALL LABOR, EQUIPMENT, MATERIALS AND INCIDENTALS REQUIRED TO OFFLOAD AND INSTALL THE SYSTEM AND APPURTENANCES IN ACCORDANCE WITH THIS DRAWING AND THE MANUFACTURERS SPECIFICATIONS, UNLESS OTHERWISE STATED IN MANUFACTURERS CONTRACT.
2. UNIT MUST BE INSTALLED ON LEVEL BASE. MANUFACTURER RECOMMENDS A MINIMUM 6" LEVEL ROCK BASE UNLESS SPECIFIED BY THE PROJECT ENGINEER. CONTRACTOR IS RESPONSIBLE TO VERIFY PROJECT ENGINEERS RECOMMENDED BASE SPECIFICATIONS.
3. ALL PIPES MUST BE FLUSH WITH INSIDE SURFACE OF CONCRETE. (PIPES CANNOT INTRUDE BEYOND FLUSH). INVERT OF OUTFLOW PIPE MUST BE FLUSH WITH DISCHARGE CHAMBER FLOOR. ALL GAPS AROUND PIPES SHALL BE SEALED WATER TIGHT WITH A NON-SHRINK GROUT PER MANUFACTURERS STANDARD CONNECTION DETAIL AND SHALL MEET OR EXCEED REGIONAL PIPE CONNECTION STANDARDS.
4. CONTRACTOR TO SUPPLY AND INSTALL ALL EXTERNAL CONNECTING PIPES.
5. CONTRACTOR RESPONSIBLE FOR INSTALLATION OF ALL RISERS, MANHOLES, AND HATCHES. CONTRACTOR TO GROUT ALL MANHOLES AND HATCHES TO MATCH FINISHED SURFACE UNLESS SPECIFIED OTHERWISE.
6. DRIP OR SPRAY IRRIGATION REQUIRED ON ALL UNITS WITH VEGETATION.

GENERAL NOTES

1. MANUFACTURER TO PROVIDE ALL MATERIALS UNLESS OTHERWISE NOTED.
2. ALL DIMENSIONS, ELEVATIONS, SPECIFICATIONS AND CAPACITIES ARE SUBJECT TO CHANGE. FOR PROJECT SPECIFIC DRAWINGS DETAILING EXACT DIMENSIONS, WEIGHTS AND ACCESSORIES PLEASE CONTACT MANUFACTURER.

TREATMENT FLOW (CFS)	0.073
OPERATING HEAD (FT)	3.4
PRETREATMENT LOADING RATE (GPM/SF)	TBD
WETLAND MEDIA LOADING RATE (GPM/SF)	1.0

THE PRODUCT DESCRIBED MAY BE PROTECTED BY ONE OR MORE OF THE FOLLOWING US PATENTS: 7,425,262; 7,470,362; 7,674,378; 8,303,816; RELATED FOREIGN PATENTS OR OTHER PATENTS PENDING

PROPRIETARY AND CONFIDENTIAL:

THE INFORMATION CONTAINED IN THIS DRAWING IS THE SOLE PROPERTY OF MODULAR WETLANDS SYSTEMS. ANY REPRODUCTION IN PART OR AS A WHOLE WITHOUT THE WRITTEN PERMISSION OF MODULAR WETLANDS SYSTEMS IS PROHIBITED.

MODULAR WETLANDS
www.ModularWetlands.com | (855) 5MOD-WET

MWS-L-4-6-V
STORMWATER BIOFILTRATION SYSTEM STANDARD DETAIL

SITE SPECIFIC DATA			
PROJECT NAME		20-750 Meridian Upper Plateau	
PROJECT LOCATION		Riverside, CA	
STRUCTURE ID		2-12D	
TREATMENT REQUIRED			
VOLUME BASED (CF)		FLOW BASED (CFS)	
6,521			
TREATMENT HGL AVAILABLE (FT)			
PEAK BYPASS REQUIRED (CFS) – IF APPLICABLE			
PIPE DATA	I.E.	MATERIAL	DIAMETER
INLET PIPE 1			
INLET PIPE 2			
OUTLET PIPE			
	PRETREATMENT	BIOFILTRATION	DISCHARGE
RIM ELEVATION			
SURFACE LOAD	PARKWAY	OPEN PLANTER	PARKWAY
FRAME & COVER	ø30"	N/A	ø24"
WETLANDMEDIA VOLUME (CY)			5.41
WETLANDMEDIA DELIVERY METHOD			TBD
ORIFICE SIZE (DIA. INCHES)			ø2.05"
MAXIMUM PICK WEIGHT (LBS)			36000
NOTES:			

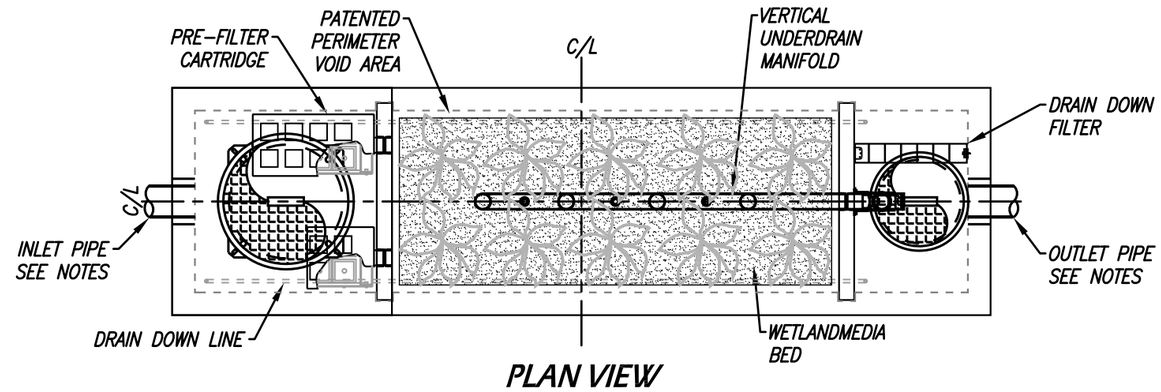

PLAN VIEW

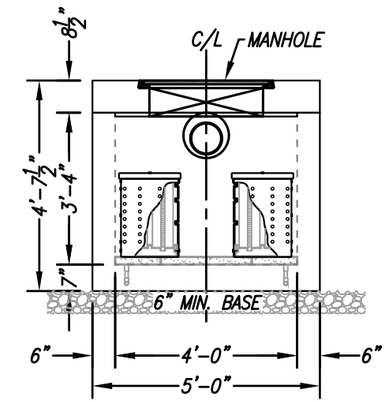

LEFT END VIEW

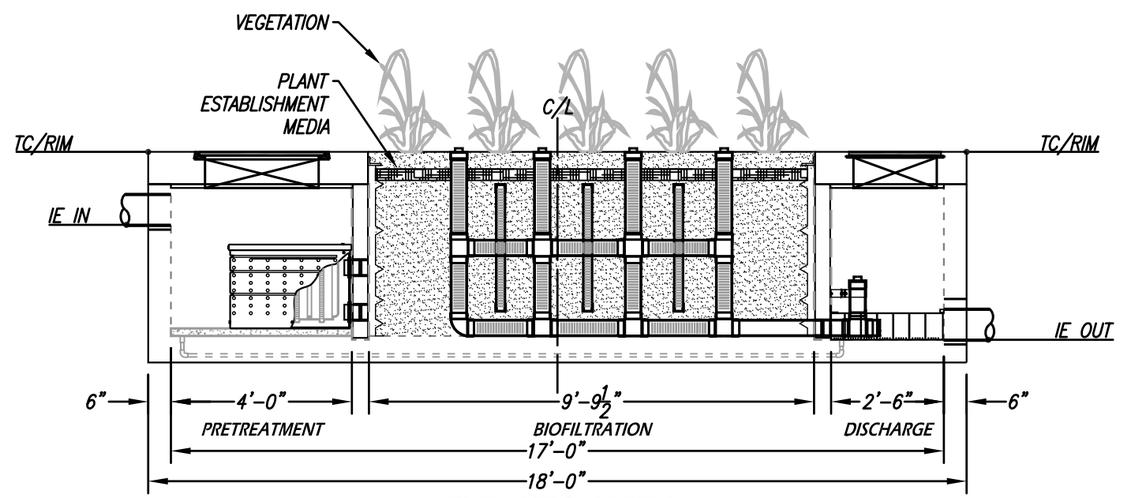

ELEVATION VIEW

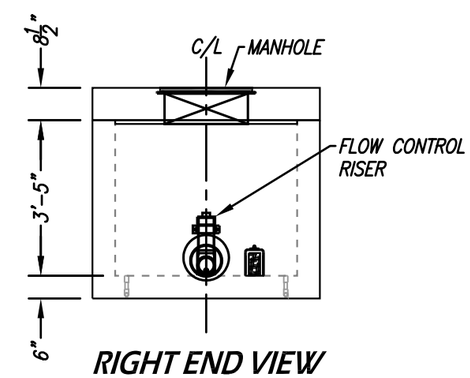

RIGHT END VIEW

INSTALLATION NOTES

1. CONTRACTOR TO PROVIDE ALL LABOR, EQUIPMENT, MATERIALS AND INCIDENTALS REQUIRED TO OFFLOAD AND INSTALL THE SYSTEM AND APPURTENANCES IN ACCORDANCE WITH THIS DRAWING AND THE MANUFACTURERS SPECIFICATIONS, UNLESS OTHERWISE STATED IN MANUFACTURERS CONTRACT.
2. UNIT MUST BE INSTALLED ON LEVEL BASE. MANUFACTURER RECOMMENDS A MINIMUM 6" LEVEL ROCK BASE UNLESS SPECIFIED BY THE PROJECT ENGINEER. CONTRACTOR IS RESPONSIBLE TO VERIFY PROJECT ENGINEERS RECOMMENDED BASE SPECIFICATIONS.
3. ALL PIPES MUST BE FLUSH WITH INSIDE SURFACE OF CONCRETE. (PIPES CANNOT INTRUDE BEYOND FLUSH). INVERT OF OUTFLOW PIPE MUST BE FLUSH WITH DISCHARGE CHAMBER FLOOR. ALL GAPS AROUND PIPES SHALL BE SEALED WATER TIGHT WITH A NON-SHRINK GROUT PER MANUFACTURERS STANDARD CONNECTION DETAIL AND SHALL MEET OR EXCEED REGIONAL PIPE CONNECTION STANDARDS.
4. CONTRACTOR TO SUPPLY AND INSTALL ALL EXTERNAL CONNECTING PIPES.
5. CONTRACTOR RESPONSIBLE FOR INSTALLATION OF ALL RISERS, MANHOLES, AND HATCHES. CONTRACTOR TO GROUT ALL MANHOLES AND HATCHES TO MATCH FINISHED SURFACE UNLESS SPECIFIED OTHERWISE.
6. DRIP OR SPRAY IRRIGATION REQUIRED ON ALL UNITS WITH VEGETATION.

GENERAL NOTES

1. MANUFACTURER TO PROVIDE ALL MATERIALS UNLESS OTHERWISE NOTED.
2. ALL DIMENSIONS, ELEVATIONS, SPECIFICATIONS AND CAPACITIES ARE SUBJECT TO CHANGE. FOR PROJECT SPECIFIC DRAWINGS DETAILING EXACT DIMENSIONS, WEIGHTS AND ACCESSORIES PLEASE CONTACT MANUFACTURER.

TREATMENT FLOW (CFS)	0.206
OPERATING HEAD (FT)	3.4
PRETREATMENT LOADING RATE (GPM/SF)	TBD
WETLAND MEDIA LOADING RATE (GPM/SF)	1.0

THE PRODUCT DESCRIBED MAY BE PROTECTED BY ONE OR MORE OF THE FOLLOWING US PATENTS: 7,425,262; 7,470,362; 7,674,378; 8,303,816; RELATED FOREIGN PATENTS OR OTHER PATENTS PENDING

PROPRIETARY AND CONFIDENTIAL:

THE INFORMATION CONTAINED IN THIS DRAWING IS THE SOLE PROPERTY OF MODULAR WETLANDS SYSTEMS. ANY REPRODUCTION IN PART OR AS A WHOLE WITHOUT THE WRITTEN PERMISSION OF MODULAR WETLANDS SYSTEMS IS PROHIBITED.

MODULAR WETLANDS
www.ModularWetlands.com | (855) 5MOD-WET

MWS-L-4-17-V
STORMWATER BIOFILTRATION SYSTEM STANDARD DETAIL

SITE SPECIFIC DATA			
PROJECT NAME		20-750 Meridian Upper Plateau	
PROJECT LOCATION		Riverside, CA	
STRUCTURE ID		2-13D	
TREATMENT REQUIRED			
VOLUME BASED (CF)		FLOW BASED (CFS)	
6,274			
TREATMENT HGL AVAILABLE (FT)			
PEAK BYPASS REQUIRED (CFS) – IF APPLICABLE			
PIPE DATA	I.E.	MATERIAL	DIAMETER
INLET PIPE 1			
INLET PIPE 2			
OUTLET PIPE			
	PRETREATMENT	BIOFILTRATION	DISCHARGE
RIM ELEVATION			
SURFACE LOAD	PARKWAY	OPEN PLANTER	PARKWAY
FRAME & COVER	ø30"	N/A	ø24"
WETLANDMEDIA VOLUME (CY)			5.41
WETLANDMEDIA DELIVERY METHOD			TBD
ORIFICE SIZE (DIA. INCHES)			ø2.05"
MAXIMUM PICK WEIGHT (LBS)			36000
NOTES:			

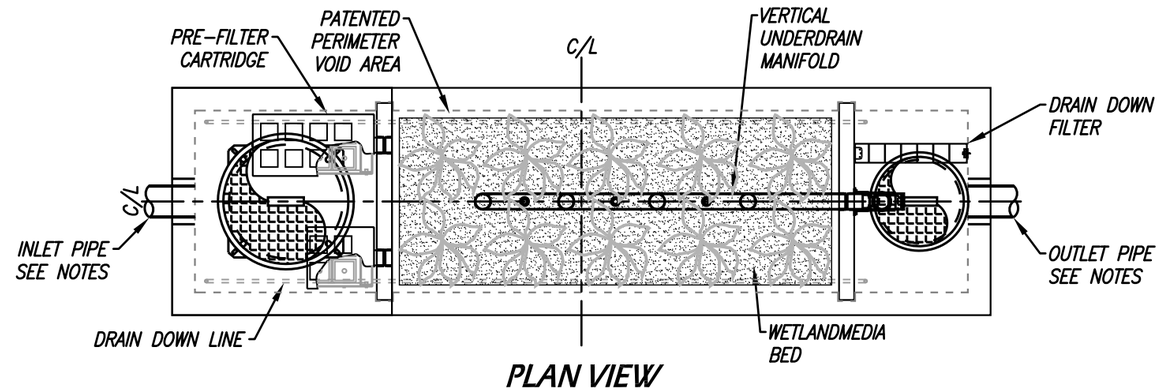

PLAN VIEW

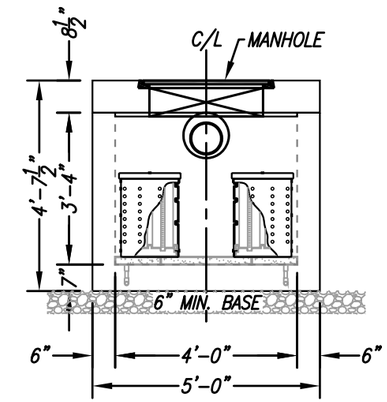

LEFT END VIEW

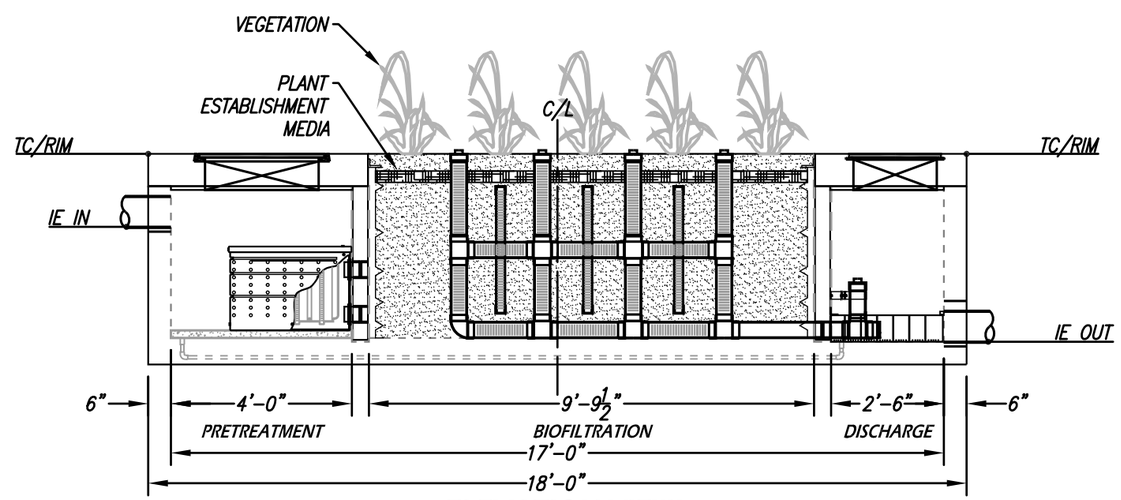

ELEVATION VIEW

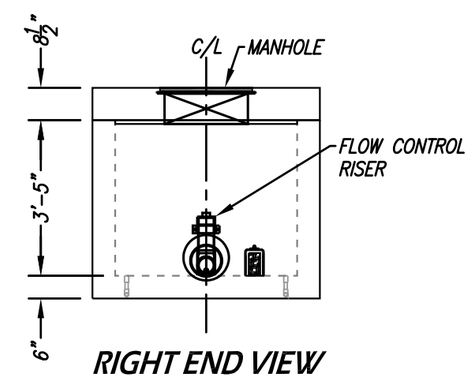

RIGHT END VIEW

INSTALLATION NOTES

1. CONTRACTOR TO PROVIDE ALL LABOR, EQUIPMENT, MATERIALS AND INCIDENTALS REQUIRED TO OFFLOAD AND INSTALL THE SYSTEM AND APPURTENANCES IN ACCORDANCE WITH THIS DRAWING AND THE MANUFACTURERS SPECIFICATIONS, UNLESS OTHERWISE STATED IN MANUFACTURERS CONTRACT.
2. UNIT MUST BE INSTALLED ON LEVEL BASE. MANUFACTURER RECOMMENDS A MINIMUM 6" LEVEL ROCK BASE UNLESS SPECIFIED BY THE PROJECT ENGINEER. CONTRACTOR IS RESPONSIBLE TO VERIFY PROJECT ENGINEERS RECOMMENDED BASE SPECIFICATIONS.
3. ALL PIPES MUST BE FLUSH WITH INSIDE SURFACE OF CONCRETE. (PIPES CANNOT INTRUDE BEYOND FLUSH). INVERT OF OUTFLOW PIPE MUST BE FLUSH WITH DISCHARGE CHAMBER FLOOR. ALL GAPS AROUND PIPES SHALL BE SEALED WATER TIGHT WITH A NON-SHRINK GROUT PER MANUFACTURERS STANDARD CONNECTION DETAIL AND SHALL MEET OR EXCEED REGIONAL PIPE CONNECTION STANDARDS.
4. CONTRACTOR TO SUPPLY AND INSTALL ALL EXTERNAL CONNECTING PIPES.
5. CONTRACTOR RESPONSIBLE FOR INSTALLATION OF ALL RISERS, MANHOLES, AND HATCHES. CONTRACTOR TO GROUT ALL MANHOLES AND HATCHES TO MATCH FINISHED SURFACE UNLESS SPECIFIED OTHERWISE.
6. DRIP OR SPRAY IRRIGATION REQUIRED ON ALL UNITS WITH VEGETATION.

GENERAL NOTES

1. MANUFACTURER TO PROVIDE ALL MATERIALS UNLESS OTHERWISE NOTED.
2. ALL DIMENSIONS, ELEVATIONS, SPECIFICATIONS AND CAPACITIES ARE SUBJECT TO CHANGE. FOR PROJECT SPECIFIC DRAWINGS DETAILING EXACT DIMENSIONS, WEIGHTS AND ACCESSORIES PLEASE CONTACT MANUFACTURER.

TREATMENT FLOW (CFS)	0.206
OPERATING HEAD (FT)	3.4
PRETREATMENT LOADING RATE (GPM/SF)	TBD
WETLAND MEDIA LOADING RATE (GPM/SF)	1.0

THE PRODUCT DESCRIBED MAY BE PROTECTED BY ONE OR MORE OF THE FOLLOWING US PATENTS: 7,425,262; 7,470,362; 7,674,378; 8,303,816; RELATED FOREIGN PATENTS OR OTHER PATENTS PENDING

PROPRIETARY AND CONFIDENTIAL:

THE INFORMATION CONTAINED IN THIS DRAWING IS THE SOLE PROPERTY OF MODULAR WETLANDS SYSTEMS. ANY REPRODUCTION IN PART OR AS A WHOLE WITHOUT THE WRITTEN PERMISSION OF MODULAR WETLANDS SYSTEMS IS PROHIBITED.

MODULAR WETLANDS
www.ModularWetlands.com | (855) 5MOD-WET

MWS-L-4-17-V
STORMWATER BIOFILTRATION SYSTEM STANDARD DETAIL

SITE SPECIFIC DATA			
PROJECT NAME		20-750 Meridian Upper Plateau	
PROJECT LOCATION		Riverside, CA	
STRUCTURE ID		3-1.1D	
TREATMENT REQUIRED			
VOLUME BASED (CF)		FLOW BASED (CFS)	
3,621			
TREATMENT HGL AVAILABLE (FT)			
PEAK BYPASS REQUIRED (CFS) – IF APPLICABLE			
PIPE DATA	I.E.	MATERIAL	DIAMETER
INLET PIPE 1			
INLET PIPE 2			
OUTLET PIPE			
	PRETREATMENT	BIOFILTRATION	DISCHARGE
RIM ELEVATION			
SURFACE LOAD	PARKWAY	OPEN PLANTER	PARKWAY
FRAME & COVER	ø30"	N/A	ø24"
WETLANDMEDIA VOLUME (CY)			3.05
WETLANDMEDIA DELIVERY METHOD			TBD
ORIFICE SIZE (DIA. INCHES)			ø1.71"
MAXIMUM PICK WEIGHT (LBS)			27000
NOTES:			

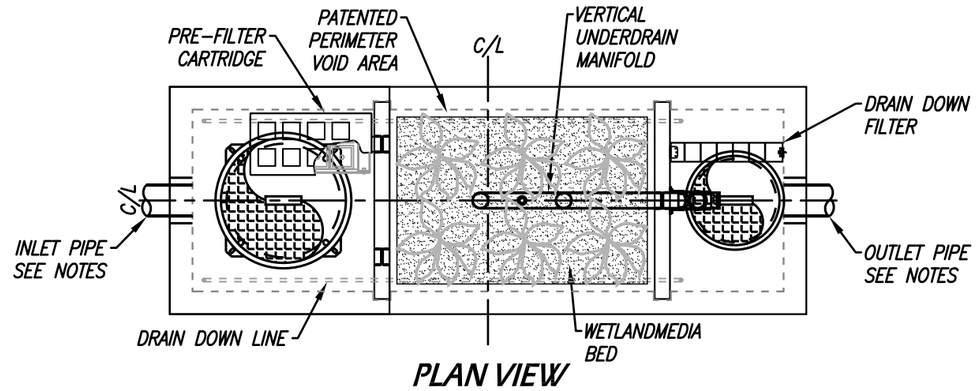

PLAN VIEW

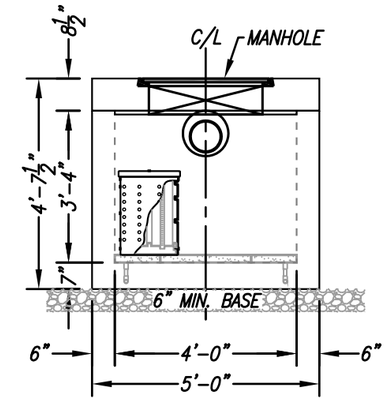

LEFT END VIEW

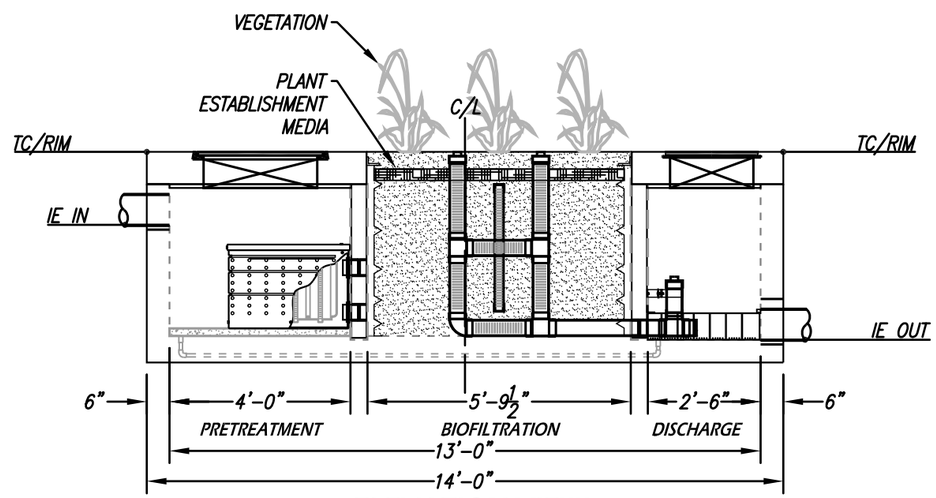

ELEVATION VIEW

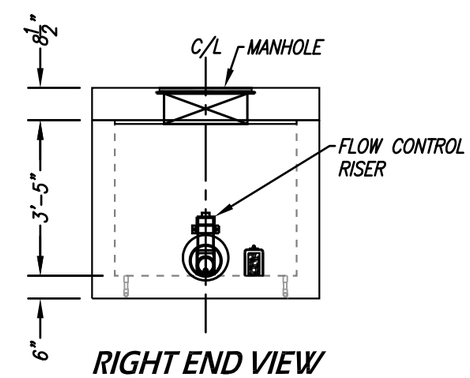

RIGHT END VIEW

INSTALLATION NOTES

1. CONTRACTOR TO PROVIDE ALL LABOR, EQUIPMENT, MATERIALS AND INCIDENTALS REQUIRED TO OFFLOAD AND INSTALL THE SYSTEM AND APPURTENANCES IN ACCORDANCE WITH THIS DRAWING AND THE MANUFACTURERS SPECIFICATIONS, UNLESS OTHERWISE STATED IN MANUFACTURERS CONTRACT.
2. UNIT MUST BE INSTALLED ON LEVEL BASE. MANUFACTURER RECOMMENDS A MINIMUM 6" LEVEL ROCK BASE UNLESS SPECIFIED BY THE PROJECT ENGINEER. CONTRACTOR IS RESPONSIBLE TO VERIFY PROJECT ENGINEERS RECOMMENDED BASE SPECIFICATIONS.
3. ALL PIPES MUST BE FLUSH WITH INSIDE SURFACE OF CONCRETE. (PIPES CANNOT INTRUDE BEYOND FLUSH). INVERT OF OUTFLOW PIPE MUST BE FLUSH WITH DISCHARGE CHAMBER FLOOR. ALL GAPS AROUND PIPES SHALL BE SEALED WATER TIGHT WITH A NON-SHRINK GROUT PER MANUFACTURERS STANDARD CONNECTION DETAIL AND SHALL MEET OR EXCEED REGIONAL PIPE CONNECTION STANDARDS.
4. CONTRACTOR TO SUPPLY AND INSTALL ALL EXTERNAL CONNECTING PIPES.
5. CONTRACTOR RESPONSIBLE FOR INSTALLATION OF ALL RISERS, MANHOLES, AND HATCHES. CONTRACTOR TO GROUT ALL MANHOLES AND HATCHES TO MATCH FINISHED SURFACE UNLESS SPECIFIED OTHERWISE.
6. DRIP OR SPRAY IRRIGATION REQUIRED ON ALL UNITS WITH VEGETATION.

GENERAL NOTES

1. MANUFACTURER TO PROVIDE ALL MATERIALS UNLESS OTHERWISE NOTED.
2. ALL DIMENSIONS, ELEVATIONS, SPECIFICATIONS AND CAPACITIES ARE SUBJECT TO CHANGE. FOR PROJECT SPECIFIC DRAWINGS DETAILING EXACT DIMENSIONS, WEIGHTS AND ACCESSORIES PLEASE CONTACT MANUFACTURER.

TREATMENT FLOW (CFS)	0.144
OPERATING HEAD (FT)	3.4
PRETREATMENT LOADING RATE (GPM/SF)	TBD
WETLAND MEDIA LOADING RATE (GPM/SF)	1.0

THE PRODUCT DESCRIBED MAY BE PROTECTED BY ONE OR MORE OF THE FOLLOWING US PATENTS: 7,425,262; 7,470,362; 7,674,378; 8,303,816; RELATED FOREIGN PATENTS OR OTHER PATENTS PENDING

PROPRIETARY AND CONFIDENTIAL:

THE INFORMATION CONTAINED IN THIS DRAWING IS THE SOLE PROPERTY OF MODULAR WETLANDS SYSTEMS. ANY REPRODUCTION IN PART OR AS A WHOLE WITHOUT THE WRITTEN PERMISSION OF MODULAR WETLANDS SYSTEMS IS PROHIBITED.

MODULAR WETLANDS
www.ModularWetlands.com | (855) 5MOD-WET

MWS-L-4-13-V
STORMWATER BIOFILTRATION SYSTEM STANDARD DETAIL

SITE SPECIFIC DATA			
PROJECT NAME		20-750 Meridian Upper Plateau	
PROJECT LOCATION		Riverside, CA	
STRUCTURE ID		3-1.2D	
TREATMENT REQUIRED			
VOLUME BASED (CF)		FLOW BASED (CFS)	
6,775			
TREATMENT HGL AVAILABLE (FT)			
PEAK BYPASS REQUIRED (CFS) – IF APPLICABLE			
PIPE DATA	I.E.	MATERIAL	DIAMETER
INLET PIPE 1			
INLET PIPE 2			
OUTLET PIPE			
	PRETREATMENT	BIOFILTRATION	DISCHARGE
RIM ELEVATION			
SURFACE LOAD	PARKWAY	OPEN PLANTER	PARKWAY
FRAME & COVER	ø30"	N/A	ø24"
WETLANDMEDIA VOLUME (CY)			5.41
WETLANDMEDIA DELIVERY METHOD			TBD
ORIFICE SIZE (DIA. INCHES)			ø2.05"
MAXIMUM PICK WEIGHT (LBS)			36000
NOTES:			

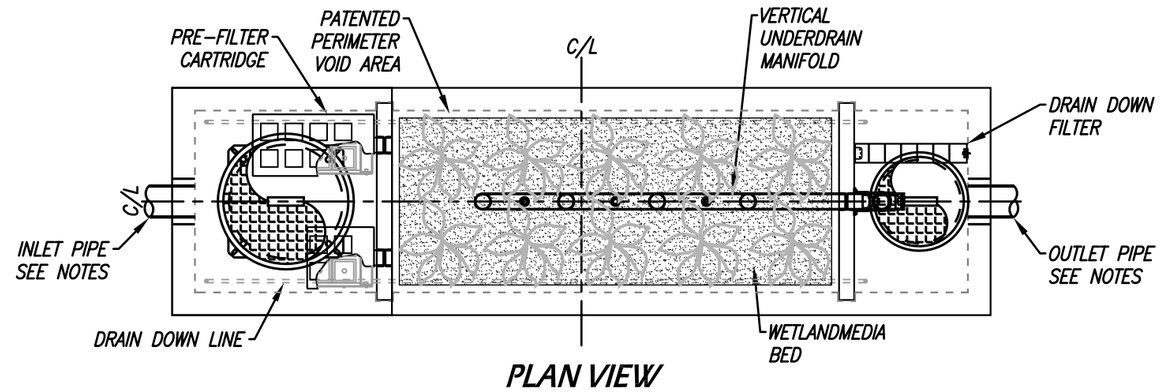

PLAN VIEW

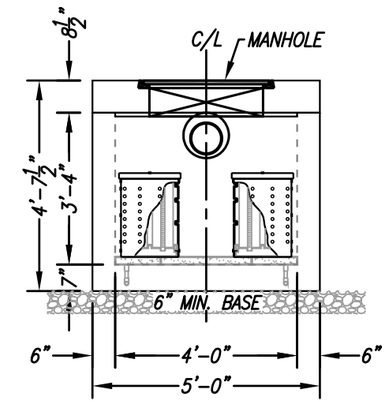

LEFT END VIEW

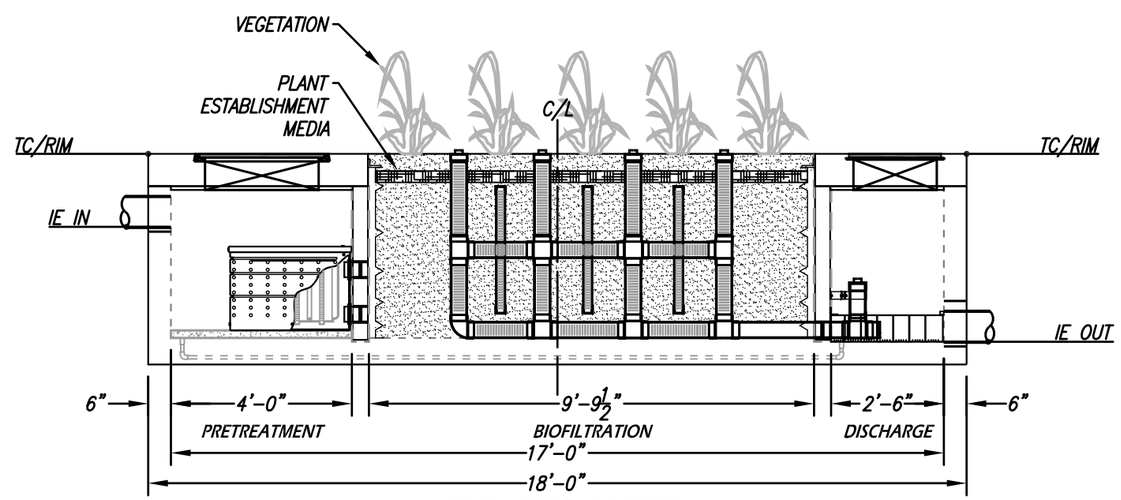

ELEVATION VIEW

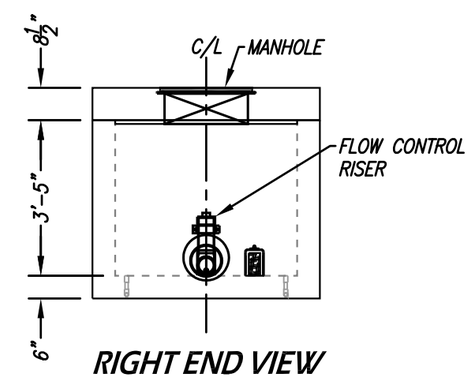

RIGHT END VIEW

INSTALLATION NOTES

1. CONTRACTOR TO PROVIDE ALL LABOR, EQUIPMENT, MATERIALS AND INCIDENTALS REQUIRED TO OFFLOAD AND INSTALL THE SYSTEM AND APPURTENANCES IN ACCORDANCE WITH THIS DRAWING AND THE MANUFACTURERS SPECIFICATIONS, UNLESS OTHERWISE STATED IN MANUFACTURERS CONTRACT.
2. UNIT MUST BE INSTALLED ON LEVEL BASE. MANUFACTURER RECOMMENDS A MINIMUM 6" LEVEL ROCK BASE UNLESS SPECIFIED BY THE PROJECT ENGINEER. CONTRACTOR IS RESPONSIBLE TO VERIFY PROJECT ENGINEERS RECOMMENDED BASE SPECIFICATIONS.
3. ALL PIPES MUST BE FLUSH WITH INSIDE SURFACE OF CONCRETE. (PIPES CANNOT INTRUDE BEYOND FLUSH). INVERT OF OUTFLOW PIPE MUST BE FLUSH WITH DISCHARGE CHAMBER FLOOR. ALL GAPS AROUND PIPES SHALL BE SEALED WATER TIGHT WITH A NON-SHRINK GROUT PER MANUFACTURERS STANDARD CONNECTION DETAIL AND SHALL MEET OR EXCEED REGIONAL PIPE CONNECTION STANDARDS.
4. CONTRACTOR TO SUPPLY AND INSTALL ALL EXTERNAL CONNECTING PIPES.
5. CONTRACTOR RESPONSIBLE FOR INSTALLATION OF ALL RISERS, MANHOLES, AND HATCHES. CONTRACTOR TO GROUT ALL MANHOLES AND HATCHES TO MATCH FINISHED SURFACE UNLESS SPECIFIED OTHERWISE.
6. DRIP OR SPRAY IRRIGATION REQUIRED ON ALL UNITS WITH VEGETATION.

GENERAL NOTES

1. MANUFACTURER TO PROVIDE ALL MATERIALS UNLESS OTHERWISE NOTED.
2. ALL DIMENSIONS, ELEVATIONS, SPECIFICATIONS AND CAPACITIES ARE SUBJECT TO CHANGE. FOR PROJECT SPECIFIC DRAWINGS DETAILING EXACT DIMENSIONS, WEIGHTS AND ACCESSORIES PLEASE CONTACT MANUFACTURER.

TREATMENT FLOW (CFS)	0.206
OPERATING HEAD (FT)	3.4
PRETREATMENT LOADING RATE (GPM/SF)	TBD
WETLAND MEDIA LOADING RATE (GPM/SF)	1.0

THE PRODUCT DESCRIBED MAY BE PROTECTED BY ONE OR MORE OF THE FOLLOWING US PATENTS: 7,425,262; 7,470,362; 7,674,378; 8,303,816; RELATED FOREIGN PATENTS OR OTHER PATENTS PENDING

PROPRIETARY AND CONFIDENTIAL:

THE INFORMATION CONTAINED IN THIS DRAWING IS THE SOLE PROPERTY OF MODULAR WETLANDS SYSTEMS. ANY REPRODUCTION IN PART OR AS A WHOLE WITHOUT THE WRITTEN PERMISSION OF MODULAR WETLANDS SYSTEMS IS PROHIBITED.

MODULAR WETLANDS
www.ModularWetlands.com | (855) 5MOD-WET

MWS-L-4-17-V
STORMWATER BIOFILTRATION SYSTEM STANDARD DETAIL

SITE SPECIFIC DATA			
PROJECT NAME		20-750 Meridian Upper Plateau	
PROJECT LOCATION		Riverside, CA	
STRUCTURE ID		3-2D	
TREATMENT REQUIRED			
VOLUME BASED (CF)		FLOW BASED (CFS)	
9,422			
TREATMENT HGL AVAILABLE (FT)			
PEAK BYPASS REQUIRED (CFS) – IF APPLICABLE			
PIPE DATA	I.E.	MATERIAL	DIAMETER
INLET PIPE 1			
INLET PIPE 2			
OUTLET PIPE			
	PRETREATMENT	BIOFILTRATION	DISCHARGE
RIM ELEVATION			
SURFACE LOAD	PARKWAY	OPEN PLANTER	PARKWAY
FRAME & COVER	ø30"	N/A	ø24"
WETLANDMEDIA VOLUME (CY)			7.63
WETLANDMEDIA DELIVERY METHOD			TBD
ORIFICE SIZE (DIA. INCHES)			ø2.34"
MAXIMUM PICK WEIGHT (LBS)			43000
NOTES:			

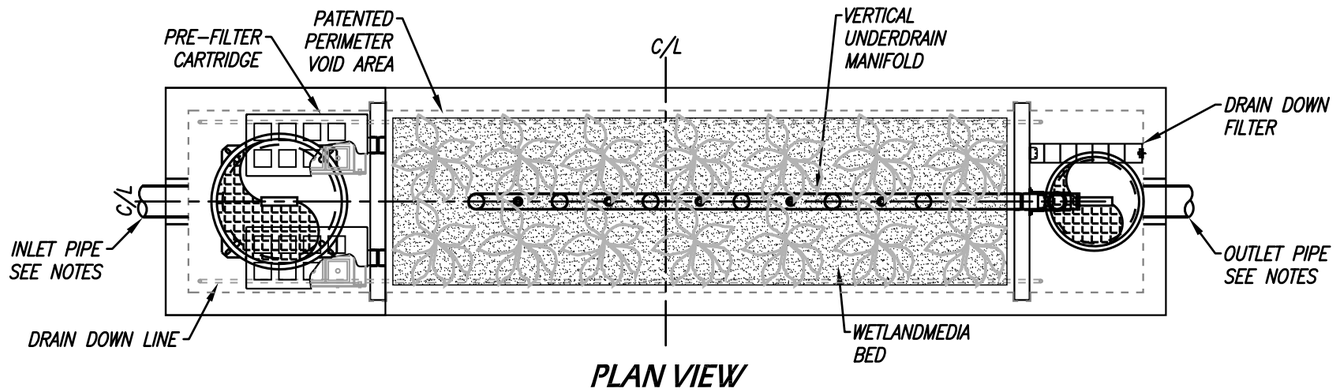

PLAN VIEW

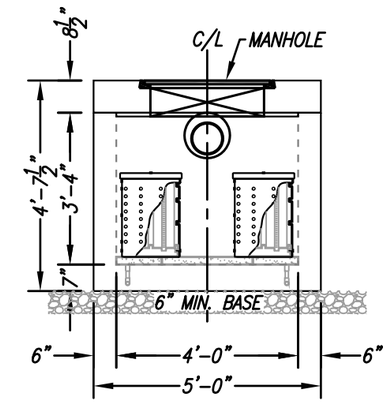

LEFT END VIEW

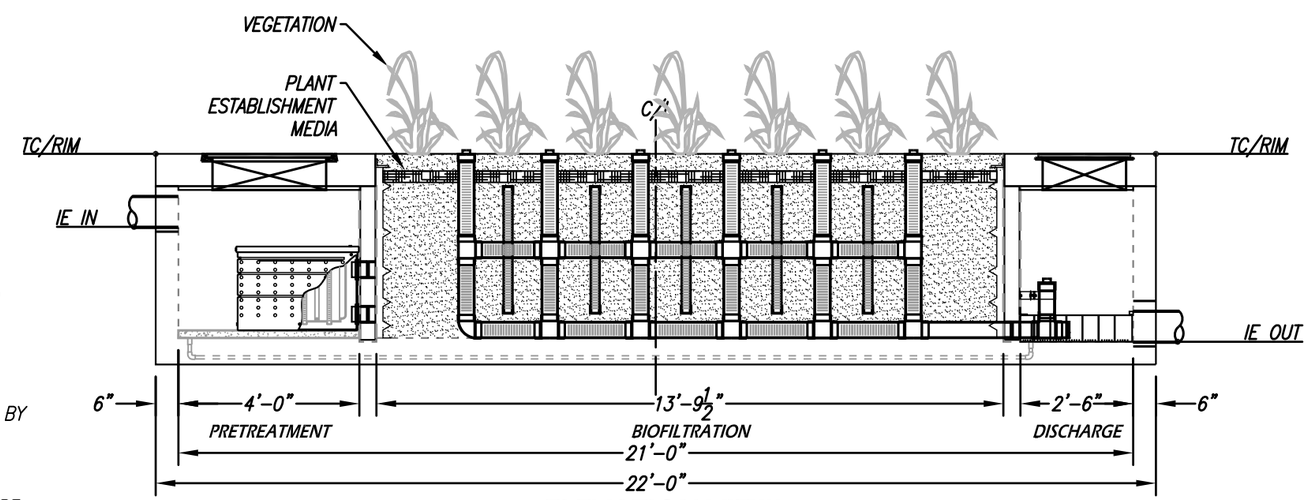

ELEVATION VIEW

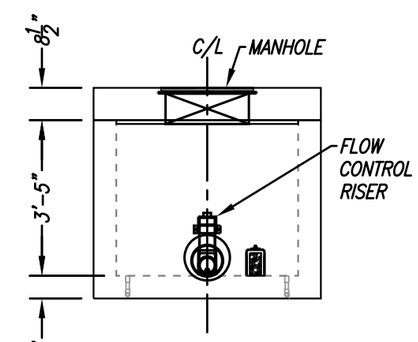

RIGHT END VIEW

INSTALLATION NOTES

1. CONTRACTOR TO PROVIDE ALL LABOR, EQUIPMENT, MATERIALS AND INCIDENTALS REQUIRED TO OFFLOAD AND INSTALL THE SYSTEM AND APPURTENANCES IN ACCORDANCE WITH THIS DRAWING AND THE MANUFACTURERS SPECIFICATIONS, UNLESS OTHERWISE STATED IN MANUFACTURERS CONTRACT.
2. UNIT MUST BE INSTALLED ON LEVEL BASE. MANUFACTURER RECOMMENDS A MINIMUM 6" LEVEL ROCK BASE UNLESS SPECIFIED BY THE PROJECT ENGINEER. CONTRACTOR IS RESPONSIBLE TO VERIFY PROJECT ENGINEERS RECOMMENDED BASE SPECIFICATIONS.
3. ALL PIPES MUST BE FLUSH WITH INSIDE SURFACE OF CONCRETE. (PIPES CANNOT INTRUDE BEYOND FLUSH). INVERT OF OUTFLOW PIPE MUST BE FLUSH WITH DISCHARGE CHAMBER FLOOR. ALL GAPS AROUND PIPES SHALL BE SEALED WATER TIGHT WITH A NON-SHRINK GROUT PER MANUFACTURERS STANDARD CONNECTION DETAIL AND SHALL MEET OR EXCEED REGIONAL PIPE CONNECTION STANDARDS.
4. CONTRACTOR TO SUPPLY AND INSTALL ALL EXTERNAL CONNECTING PIPES.
5. CONTRACTOR RESPONSIBLE FOR INSTALLATION OF ALL RISERS, MANHOLES, AND HATCHES. CONTRACTOR TO GROUT ALL MANHOLES AND HATCHES TO MATCH FINISHED SURFACE UNLESS SPECIFIED OTHERWISE.
6. DRIP OR SPRAY IRRIGATION REQUIRED ON ALL UNITS WITH VEGETATION.

GENERAL NOTES

1. MANUFACTURER TO PROVIDE ALL MATERIALS UNLESS OTHERWISE NOTED.
2. ALL DIMENSIONS, ELEVATIONS, SPECIFICATIONS AND CAPACITIES ARE SUBJECT TO CHANGE. FOR PROJECT SPECIFIC DRAWINGS DETAILING EXACT DIMENSIONS, WEIGHTS AND ACCESSORIES PLEASE CONTACT MANUFACTURER.

TREATMENT FLOW (CFS)	0.268
OPERATING HEAD (FT)	3.4
PRETREATMENT LOADING RATE (GPM/SF)	TBD
WETLAND MEDIA LOADING RATE (GPM/SF)	1.0

THE PRODUCT DESCRIBED MAY BE PROTECTED BY ONE OR MORE OF THE FOLLOWING US PATENTS: 7,425,262; 7,470,362; 7,674,378; 8,303,816; RELATED FOREIGN PATENTS OR OTHER PATENTS PENDING

PROPRIETARY AND CONFIDENTIAL:

THE INFORMATION CONTAINED IN THIS DRAWING IS THE SOLE PROPERTY OF MODULAR WETLANDS SYSTEMS. ANY REPRODUCTION IN PART OR AS A WHOLE WITHOUT THE WRITTEN PERMISSION OF MODULAR WETLANDS SYSTEMS IS PROHIBITED.

MODULAR WETLANDS
www.ModularWetlands.com | (855) 5MOD-WET

MWS-L-4-21-V
STORMWATER BIOFILTRATION SYSTEM STANDARD DETAIL

SITE SPECIFIC DATA			
PROJECT NAME		20-750 Meridian Upper Plateau	
PROJECT LOCATION		Riverside, CA	
STRUCTURE ID		5-1D	
TREATMENT REQUIRED			
VOLUME BASED (CF)		FLOW BASED (CFS)	
6,035			
TREATMENT HGL AVAILABLE (FT)			
PEAK BYPASS REQUIRED (CFS) – IF APPLICABLE			
PIPE DATA	I.E.	MATERIAL	DIAMETER
INLET PIPE 1			
INLET PIPE 2			
OUTLET PIPE			
	PRETREATMENT	BIOFILTRATION	DISCHARGE
RIM ELEVATION			
SURFACE LOAD	PARKWAY	OPEN PLANTER	PARKWAY
FRAME & COVER	ø30"	N/A	ø24"
WETLANDMEDIA VOLUME (CY)			4.30
WETLANDMEDIA DELIVERY METHOD			TBD
ORIFICE SIZE (DIA. INCHES)			ø1.89"
MAXIMUM PICK WEIGHT (LBS)			31000
NOTES:			

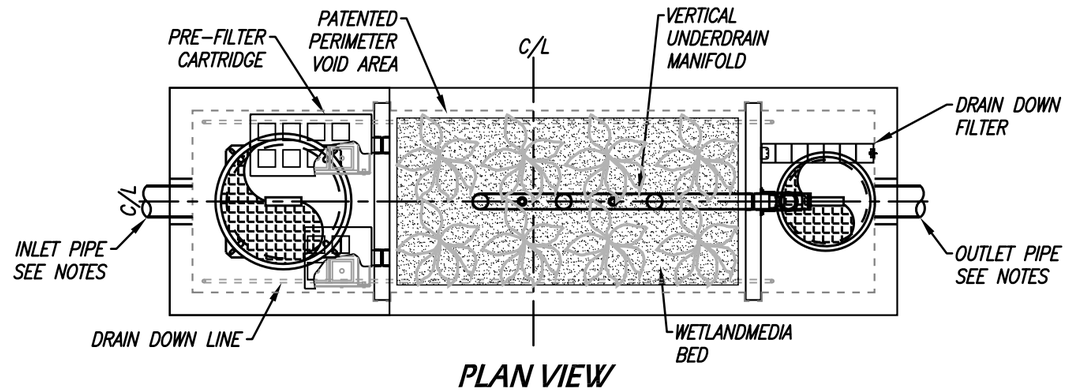

PLAN VIEW

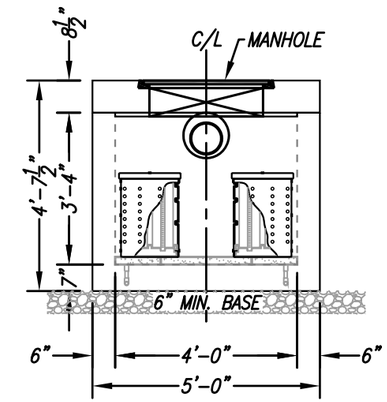

LEFT END VIEW

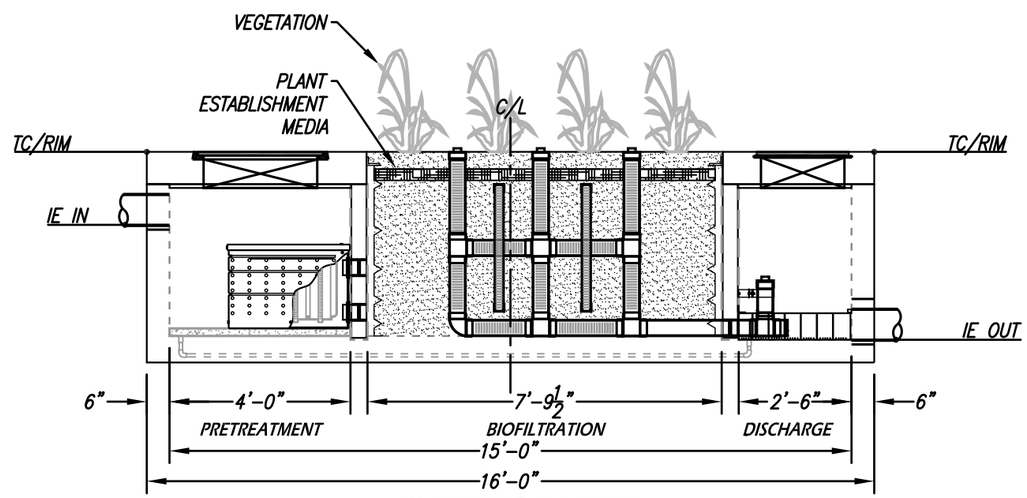

ELEVATION VIEW

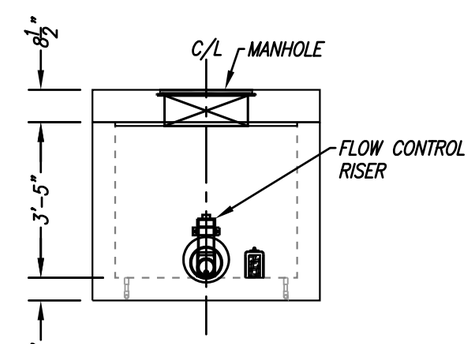

RIGHT END VIEW

INSTALLATION NOTES

1. CONTRACTOR TO PROVIDE ALL LABOR, EQUIPMENT, MATERIALS AND INCIDENTALS REQUIRED TO OFFLOAD AND INSTALL THE SYSTEM AND APPURTENANCES IN ACCORDANCE WITH THIS DRAWING AND THE MANUFACTURERS SPECIFICATIONS, UNLESS OTHERWISE STATED IN MANUFACTURERS CONTRACT.
2. UNIT MUST BE INSTALLED ON LEVEL BASE. MANUFACTURER RECOMMENDS A MINIMUM 6" LEVEL ROCK BASE UNLESS SPECIFIED BY THE PROJECT ENGINEER. CONTRACTOR IS RESPONSIBLE TO VERIFY PROJECT ENGINEERS RECOMMENDED BASE SPECIFICATIONS.
3. ALL PIPES MUST BE FLUSH WITH INSIDE SURFACE OF CONCRETE. (PIPES CANNOT INTRUDE BEYOND FLUSH). INVERT OF OUTFLOW PIPE MUST BE FLUSH WITH DISCHARGE CHAMBER FLOOR. ALL GAPS AROUND PIPES SHALL BE SEALED WATER TIGHT WITH A NON-SHRINK GROUT PER MANUFACTURERS STANDARD CONNECTION DETAIL AND SHALL MEET OR EXCEED REGIONAL PIPE CONNECTION STANDARDS.
4. CONTRACTOR TO SUPPLY AND INSTALL ALL EXTERNAL CONNECTING PIPES.
5. CONTRACTOR RESPONSIBLE FOR INSTALLATION OF ALL RISERS, MANHOLES, AND HATCHES. CONTRACTOR TO GROUT ALL MANHOLES AND HATCHES TO MATCH FINISHED SURFACE UNLESS SPECIFIED OTHERWISE.
6. DRIP OR SPRAY IRRIGATION REQUIRED ON ALL UNITS WITH VEGETATION.

GENERAL NOTES

1. MANUFACTURER TO PROVIDE ALL MATERIALS UNLESS OTHERWISE NOTED.
2. ALL DIMENSIONS, ELEVATIONS, SPECIFICATIONS AND CAPACITIES ARE SUBJECT TO CHANGE. FOR PROJECT SPECIFIC DRAWINGS DETAILING EXACT DIMENSIONS, WEIGHTS AND ACCESSORIES PLEASE CONTACT MANUFACTURER.

TREATMENT FLOW (CFS)	0.175
OPERATING HEAD (FT)	3.4
PRETREATMENT LOADING RATE (GPM/SF)	TBD
WETLAND MEDIA LOADING RATE (GPM/SF)	1.0

THE PRODUCT DESCRIBED MAY BE PROTECTED BY ONE OR MORE OF THE FOLLOWING US PATENTS: 7,425,262; 7,470,362; 7,674,378; 8,303,816; RELATED FOREIGN PATENTS OR OTHER PATENTS PENDING

PROPRIETARY AND CONFIDENTIAL:

THE INFORMATION CONTAINED IN THIS DRAWING IS THE SOLE PROPERTY OF MODULAR WETLANDS SYSTEMS. ANY REPRODUCTION IN PART OR AS A WHOLE WITHOUT THE WRITTEN PERMISSION OF MODULAR WETLANDS SYSTEMS IS PROHIBITED.

MODULAR WETLANDS
www.ModularWetlands.com | (855) 5MOD-WET

MWS-L-4-15-V
STORMWATER BIOFILTRATION SYSTEM STANDARD DETAIL

SITE SPECIFIC DATA			
PROJECT NAME		20-750 Meridian Upper Plateau	
PROJECT LOCATION		Riverside, CA	
STRUCTURE ID		5-2D	
TREATMENT REQUIRED			
VOLUME BASED (CF)		FLOW BASED (CFS)	
6,035			
TREATMENT HGL AVAILABLE (FT)			
PEAK BYPASS REQUIRED (CFS) – IF APPLICABLE			
PIPE DATA	I.E.	MATERIAL	DIAMETER
INLET PIPE 1			
INLET PIPE 2			
OUTLET PIPE			
	PRETREATMENT	BIOFILTRATION	DISCHARGE
RIM ELEVATION			
SURFACE LOAD	PARKWAY	OPEN PLANTER	PARKWAY
FRAME & COVER	ø30"	N/A	ø24"
WETLANDMEDIA VOLUME (CY)			4.30
WETLANDMEDIA DELIVERY METHOD			TBD
ORIFICE SIZE (DIA. INCHES)			ø1.89"
MAXIMUM PICK WEIGHT (LBS)			31000
NOTES:			

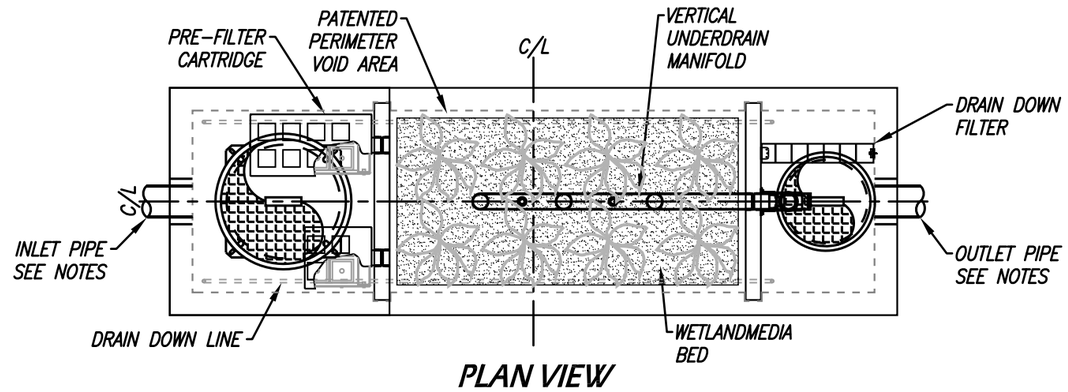

PLAN VIEW

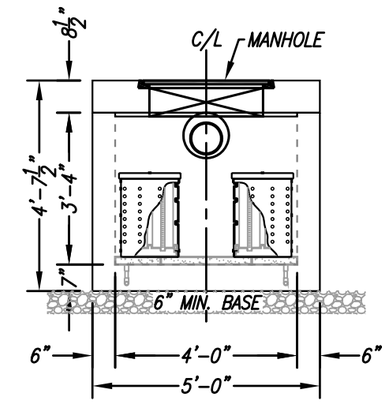

LEFT END VIEW

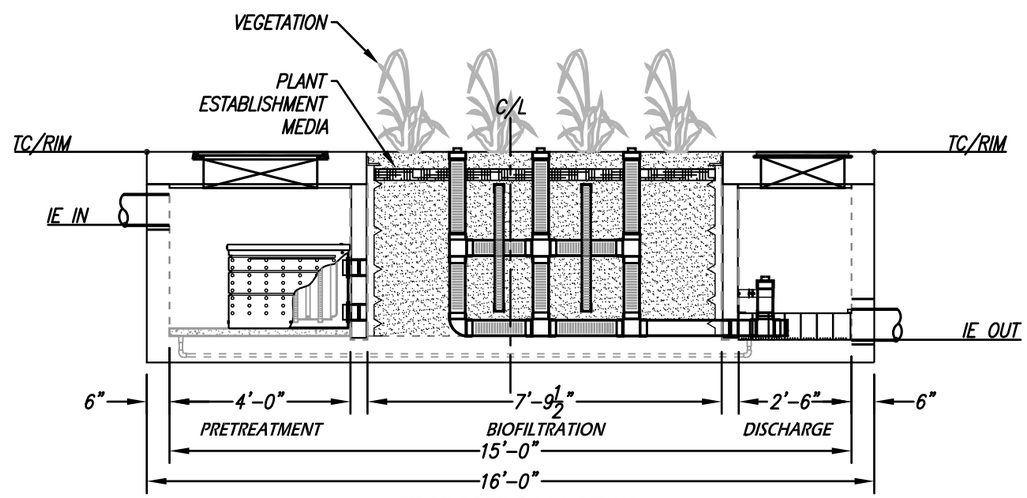

ELEVATION VIEW

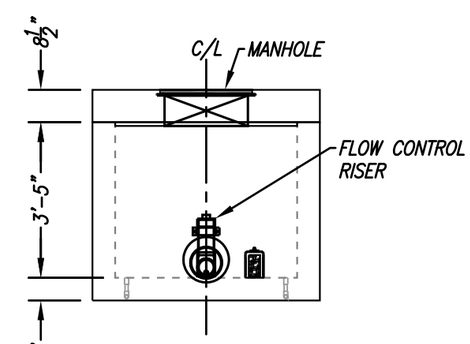

RIGHT END VIEW

INSTALLATION NOTES

1. CONTRACTOR TO PROVIDE ALL LABOR, EQUIPMENT, MATERIALS AND INCIDENTALS REQUIRED TO OFFLOAD AND INSTALL THE SYSTEM AND APPURTENANCES IN ACCORDANCE WITH THIS DRAWING AND THE MANUFACTURERS SPECIFICATIONS, UNLESS OTHERWISE STATED IN MANUFACTURERS CONTRACT.
2. UNIT MUST BE INSTALLED ON LEVEL BASE. MANUFACTURER RECOMMENDS A MINIMUM 6" LEVEL ROCK BASE UNLESS SPECIFIED BY THE PROJECT ENGINEER. CONTRACTOR IS RESPONSIBLE TO VERIFY PROJECT ENGINEERS RECOMMENDED BASE SPECIFICATIONS.
3. ALL PIPES MUST BE FLUSH WITH INSIDE SURFACE OF CONCRETE. (PIPES CANNOT INTRUDE BEYOND FLUSH). INVERT OF OUTFLOW PIPE MUST BE FLUSH WITH DISCHARGE CHAMBER FLOOR. ALL GAPS AROUND PIPES SHALL BE SEALED WATER TIGHT WITH A NON-SHRINK GROUT PER MANUFACTURERS STANDARD CONNECTION DETAIL AND SHALL MEET OR EXCEED REGIONAL PIPE CONNECTION STANDARDS.
4. CONTRACTOR TO SUPPLY AND INSTALL ALL EXTERNAL CONNECTING PIPES.
5. CONTRACTOR RESPONSIBLE FOR INSTALLATION OF ALL RISERS, MANHOLES, AND HATCHES. CONTRACTOR TO GROUT ALL MANHOLES AND HATCHES TO MATCH FINISHED SURFACE UNLESS SPECIFIED OTHERWISE.
6. DRIP OR SPRAY IRRIGATION REQUIRED ON ALL UNITS WITH VEGETATION.

GENERAL NOTES

1. MANUFACTURER TO PROVIDE ALL MATERIALS UNLESS OTHERWISE NOTED.
2. ALL DIMENSIONS, ELEVATIONS, SPECIFICATIONS AND CAPACITIES ARE SUBJECT TO CHANGE. FOR PROJECT SPECIFIC DRAWINGS DETAILING EXACT DIMENSIONS, WEIGHTS AND ACCESSORIES PLEASE CONTACT MANUFACTURER.

TREATMENT FLOW (CFS)	0.175
OPERATING HEAD (FT)	3.4
PRETREATMENT LOADING RATE (GPM/SF)	TBD
WETLAND MEDIA LOADING RATE (GPM/SF)	1.0

THE PRODUCT DESCRIBED MAY BE PROTECTED BY ONE OR MORE OF THE FOLLOWING US PATENTS: 7,425,262; 7,470,362; 7,674,378; 8,303,816; RELATED FOREIGN PATENTS OR OTHER PATENTS PENDING

PROPRIETARY AND CONFIDENTIAL:

THE INFORMATION CONTAINED IN THIS DRAWING IS THE SOLE PROPERTY OF MODULAR WETLANDS SYSTEMS. ANY REPRODUCTION IN PART OR AS A WHOLE WITHOUT THE WRITTEN PERMISSION OF MODULAR WETLANDS SYSTEMS IS PROHIBITED.

MODULAR WETLANDS
www.ModularWetlands.com | (855) 5MOD-WET

MWS-L-4-15-V
STORMWATER BIOFILTRATION SYSTEM STANDARD DETAIL

SITE SPECIFIC DATA			
PROJECT NAME		20-750 Meridian Upper Plateau	
PROJECT LOCATION		Riverside, CA	
STRUCTURE ID		7-1D	
TREATMENT REQUIRED			
VOLUME BASED (CF)		FLOW BASED (CFS)	
8,097			
TREATMENT HGL AVAILABLE (FT)			
PEAK BYPASS REQUIRED (CFS) – IF APPLICABLE			
PIPE DATA	I.E.	MATERIAL	DIAMETER
INLET PIPE 1			
INLET PIPE 2			
OUTLET PIPE			
	PRETREATMENT	BIOFILTRATION	DISCHARGE
RIM ELEVATION			
SURFACE LOAD	PARKWAY	OPEN PLANTER	PARKWAY
FRAME & COVER	ø30"	N/A	ø24"
WETLANDMEDIA VOLUME (CY)			6.52
WETLANDMEDIA DELIVERY METHOD			TBD
ORIFICE SIZE (DIA. INCHES)			ø2.20"
MAXIMUM PICK WEIGHT (LBS)			40000
NOTES:			

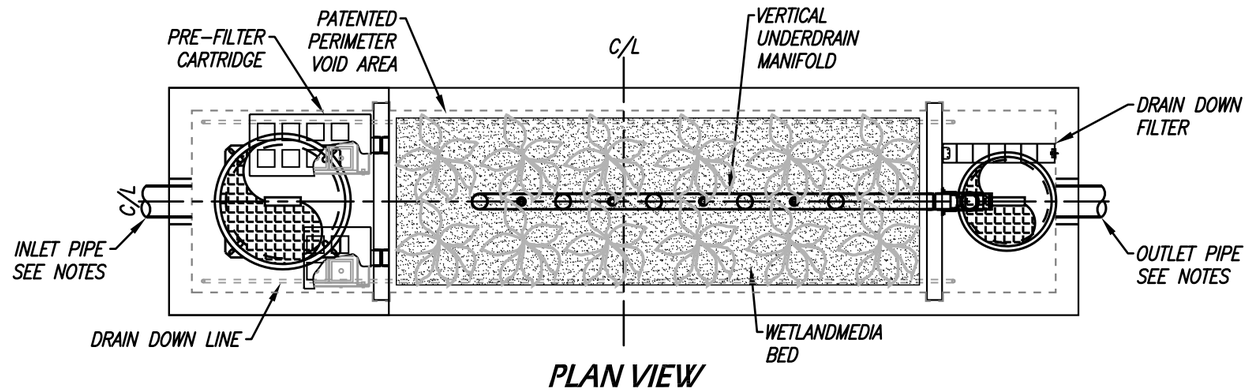

PLAN VIEW

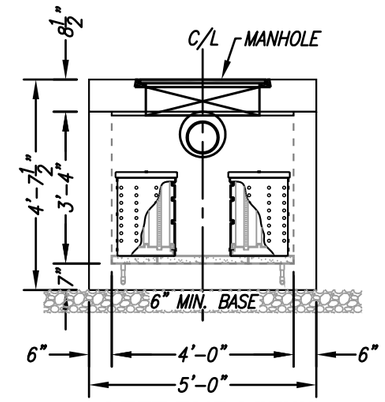

LEFT END VIEW

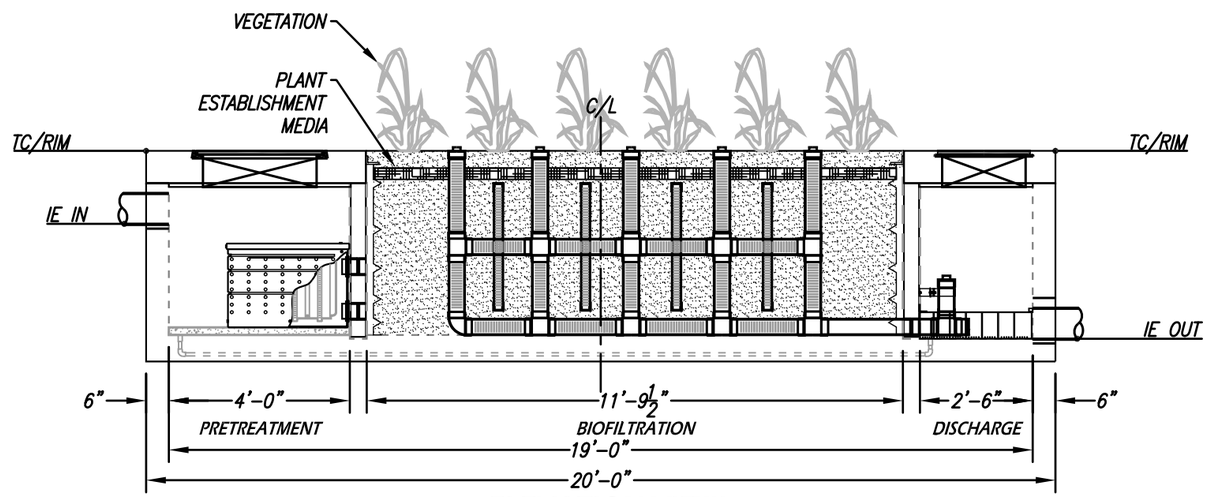

ELEVATION VIEW

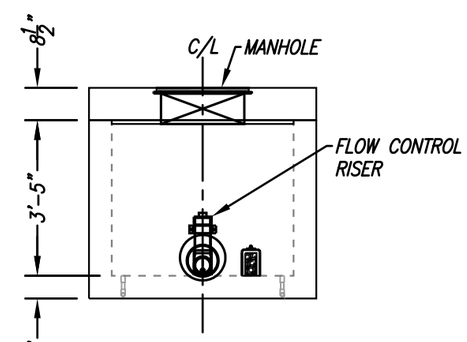

RIGHT END VIEW

INSTALLATION NOTES

1. CONTRACTOR TO PROVIDE ALL LABOR, EQUIPMENT, MATERIALS AND INCIDENTALS REQUIRED TO OFFLOAD AND INSTALL THE SYSTEM AND APPURTENANCES IN ACCORDANCE WITH THIS DRAWING AND THE MANUFACTURERS SPECIFICATIONS, UNLESS OTHERWISE STATED IN MANUFACTURERS CONTRACT.
2. UNIT MUST BE INSTALLED ON LEVEL BASE. MANUFACTURER RECOMMENDS A MINIMUM 6" LEVEL ROCK BASE UNLESS SPECIFIED BY THE PROJECT ENGINEER. CONTRACTOR IS RESPONSIBLE TO VERIFY PROJECT ENGINEERS RECOMMENDED BASE SPECIFICATIONS.
3. ALL PIPES MUST BE FLUSH WITH INSIDE SURFACE OF CONCRETE. (PIPES CANNOT INTRUDE BEYOND FLUSH). INVERT OF OUTFLOW PIPE MUST BE FLUSH WITH DISCHARGE CHAMBER FLOOR. ALL GAPS AROUND PIPES SHALL BE SEALED WATER TIGHT WITH A NON-SHRINK GROUT PER MANUFACTURERS STANDARD CONNECTION DETAIL AND SHALL MEET OR EXCEED REGIONAL PIPE CONNECTION STANDARDS.
4. CONTRACTOR TO SUPPLY AND INSTALL ALL EXTERNAL CONNECTING PIPES.
5. CONTRACTOR RESPONSIBLE FOR INSTALLATION OF ALL RISERS, MANHOLES, AND HATCHES. CONTRACTOR TO GROUT ALL MANHOLES AND HATCHES TO MATCH FINISHED SURFACE UNLESS SPECIFIED OTHERWISE.
6. DRIP OR SPRAY IRRIGATION REQUIRED ON ALL UNITS WITH VEGETATION.

GENERAL NOTES

1. MANUFACTURER TO PROVIDE ALL MATERIALS UNLESS OTHERWISE NOTED.
2. ALL DIMENSIONS, ELEVATIONS, SPECIFICATIONS AND CAPACITIES ARE SUBJECT TO CHANGE. FOR PROJECT SPECIFIC DRAWINGS DETAILING EXACT DIMENSIONS, WEIGHTS AND ACCESSORIES PLEASE CONTACT MANUFACTURER.

TREATMENT FLOW (CFS)	0.237
OPERATING HEAD (FT)	3.4
PRETREATMENT LOADING RATE (GPM/SF)	TBD
WETLAND MEDIA LOADING RATE (GPM/SF)	1.0

THE PRODUCT DESCRIBED MAY BE PROTECTED BY ONE OR MORE OF THE FOLLOWING US PATENTS: 7,425,262; 7,470,362; 7,674,378; 8,303,816; RELATED FOREIGN PATENTS OR OTHER PATENTS PENDING

PROPRIETARY AND CONFIDENTIAL:

THE INFORMATION CONTAINED IN THIS DRAWING IS THE SOLE PROPERTY OF MODULAR WETLANDS SYSTEMS. ANY REPRODUCTION IN PART OR AS A WHOLE WITHOUT THE WRITTEN PERMISSION OF MODULAR WETLANDS SYSTEMS IS PROHIBITED.

MODULAR WETLANDS
www.ModularWetlands.com | (855) 5MOD-WET

MWS-L-4-19-V
STORMWATER BIOFILTRATION SYSTEM STANDARD DETAIL

SITE SPECIFIC DATA			
PROJECT NAME		20-750 Meridian Upper Plateau	
PROJECT LOCATION		Riverside, CA	
STRUCTURE ID		7-2D	
TREATMENT REQUIRED			
VOLUME BASED (CF)		FLOW BASED (CFS)	
6,899			
TREATMENT HGL AVAILABLE (FT)			
PEAK BYPASS REQUIRED (CFS) – IF APPLICABLE			
PIPE DATA	I.E.	MATERIAL	DIAMETER
INLET PIPE 1			
INLET PIPE 2			
OUTLET PIPE			
	PRETREATMENT	BIOFILTRATION	DISCHARGE
RIM ELEVATION			
SURFACE LOAD	PARKWAY	OPEN PLANTER	PARKWAY
FRAME & COVER	ø30"	N/A	ø24"
WETLANDMEDIA VOLUME (CY)			5.41
WETLANDMEDIA DELIVERY METHOD			TBD
ORIFICE SIZE (DIA. INCHES)			ø2.05"
MAXIMUM PICK WEIGHT (LBS)			36000
NOTES:			

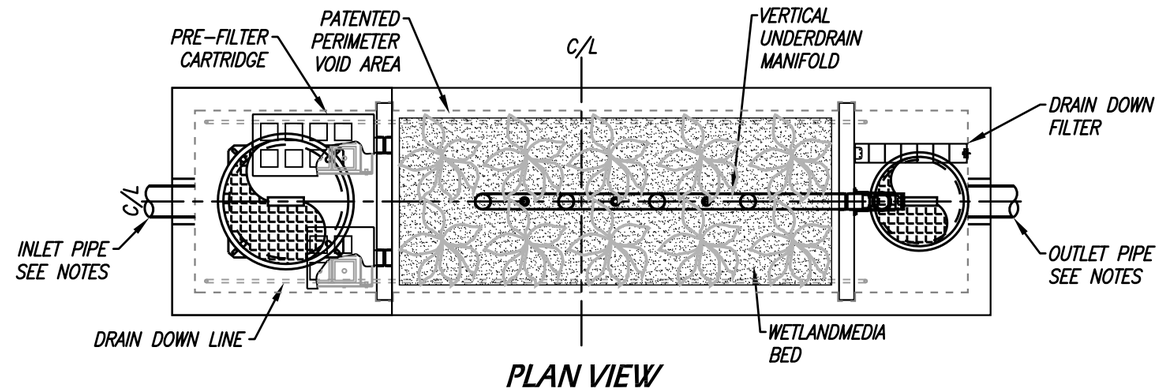

PLAN VIEW

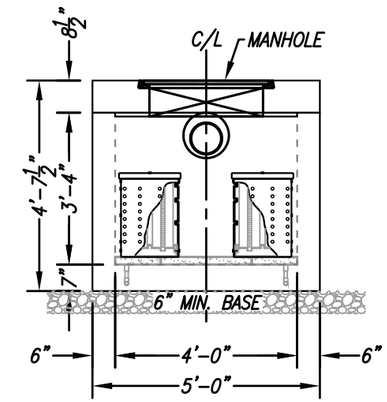

LEFT END VIEW

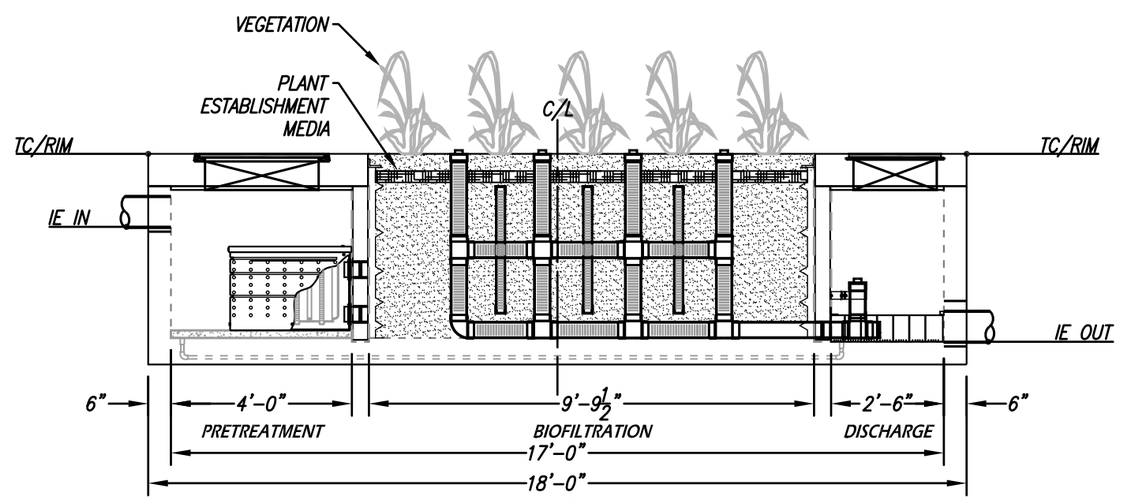

ELEVATION VIEW

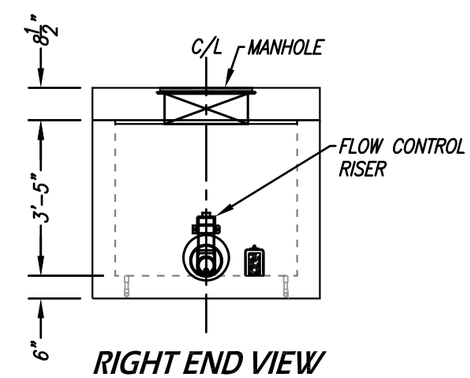

RIGHT END VIEW

INSTALLATION NOTES

1. CONTRACTOR TO PROVIDE ALL LABOR, EQUIPMENT, MATERIALS AND INCIDENTALS REQUIRED TO OFFLOAD AND INSTALL THE SYSTEM AND APPURTENANCES IN ACCORDANCE WITH THIS DRAWING AND THE MANUFACTURERS SPECIFICATIONS, UNLESS OTHERWISE STATED IN MANUFACTURERS CONTRACT.
2. UNIT MUST BE INSTALLED ON LEVEL BASE. MANUFACTURER RECOMMENDS A MINIMUM 6" LEVEL ROCK BASE UNLESS SPECIFIED BY THE PROJECT ENGINEER. CONTRACTOR IS RESPONSIBLE TO VERIFY PROJECT ENGINEERS RECOMMENDED BASE SPECIFICATIONS.
3. ALL PIPES MUST BE FLUSH WITH INSIDE SURFACE OF CONCRETE. (PIPES CANNOT INTRUDE BEYOND FLUSH). INVERT OF OUTFLOW PIPE MUST BE FLUSH WITH DISCHARGE CHAMBER FLOOR. ALL GAPS AROUND PIPES SHALL BE SEALED WATER TIGHT WITH A NON-SHRINK GROUT PER MANUFACTURERS STANDARD CONNECTION DETAIL AND SHALL MEET OR EXCEED REGIONAL PIPE CONNECTION STANDARDS.
4. CONTRACTOR TO SUPPLY AND INSTALL ALL EXTERNAL CONNECTING PIPES.
5. CONTRACTOR RESPONSIBLE FOR INSTALLATION OF ALL RISERS, MANHOLES, AND HATCHES. CONTRACTOR TO GROUT ALL MANHOLES AND HATCHES TO MATCH FINISHED SURFACE UNLESS SPECIFIED OTHERWISE.
6. DRIP OR SPRAY IRRIGATION REQUIRED ON ALL UNITS WITH VEGETATION.

GENERAL NOTES

1. MANUFACTURER TO PROVIDE ALL MATERIALS UNLESS OTHERWISE NOTED.
2. ALL DIMENSIONS, ELEVATIONS, SPECIFICATIONS AND CAPACITIES ARE SUBJECT TO CHANGE. FOR PROJECT SPECIFIC DRAWINGS DETAILING EXACT DIMENSIONS, WEIGHTS AND ACCESSORIES PLEASE CONTACT MANUFACTURER.

TREATMENT FLOW (CFS)	0.206
OPERATING HEAD (FT)	3.4
PRETREATMENT LOADING RATE (GPM/SF)	TBD
WETLAND MEDIA LOADING RATE (GPM/SF)	1.0

THE PRODUCT DESCRIBED MAY BE PROTECTED BY ONE OR MORE OF THE FOLLOWING US PATENTS: 7,425,262; 7,470,362; 7,674,378; 8,303,816; RELATED FOREIGN PATENTS OR OTHER PATENTS PENDING

PROPRIETARY AND CONFIDENTIAL:

THE INFORMATION CONTAINED IN THIS DRAWING IS THE SOLE PROPERTY OF MODULAR WETLANDS SYSTEMS. ANY REPRODUCTION IN PART OR AS A WHOLE WITHOUT THE WRITTEN PERMISSION OF MODULAR WETLANDS SYSTEMS IS PROHIBITED.

MODULAR WETLANDS
www.ModularWetlands.com | (855) 5MOD-WET

MWS-L-4-17-V
STORMWATER BIOFILTRATION SYSTEM STANDARD DETAIL

SITE SPECIFIC DATA			
PROJECT NAME		20-750 Meridian Upper Plateau	
PROJECT LOCATION		Riverside, CA	
STRUCTURE ID		9-1D	
TREATMENT REQUIRED			
VOLUME BASED (CF)		FLOW BASED (CFS)	
6,837			
TREATMENT HGL AVAILABLE (FT)			
PEAK BYPASS REQUIRED (CFS) – IF APPLICABLE			
PIPE DATA	I.E.	MATERIAL	DIAMETER
INLET PIPE 1			
INLET PIPE 2			
OUTLET PIPE			
	PRETREATMENT	BIOFILTRATION	DISCHARGE
RIM ELEVATION			
SURFACE LOAD	PARKWAY	OPEN PLANTER	PARKWAY
FRAME & COVER	ø30"	N/A	ø24"
WETLANDMEDIA VOLUME (CY)			5.41
WETLANDMEDIA DELIVERY METHOD			TBD
ORIFICE SIZE (DIA. INCHES)			ø2.05"
MAXIMUM PICK WEIGHT (LBS)			36000
NOTES:			

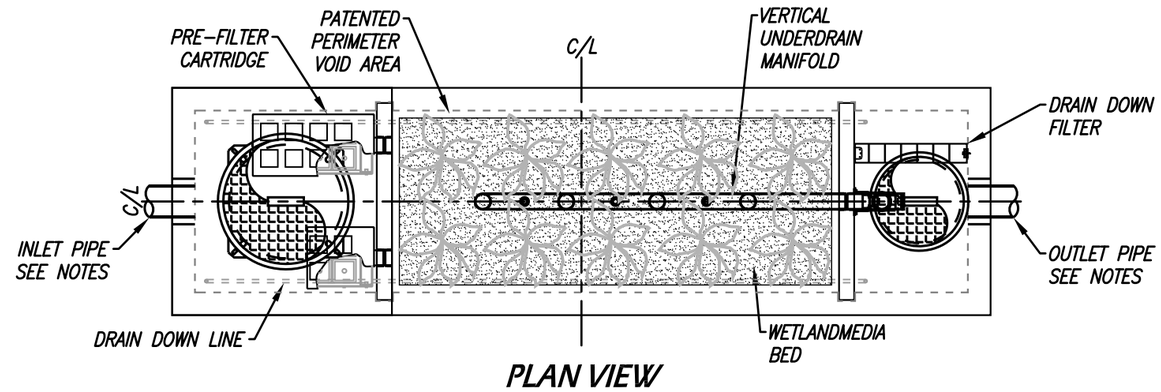

PLAN VIEW

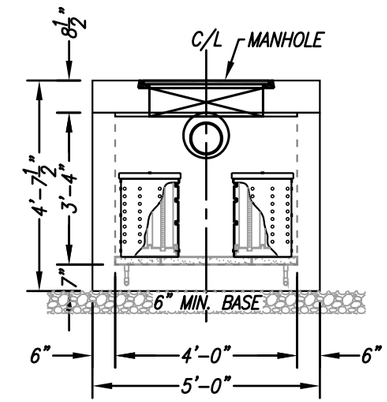

LEFT END VIEW

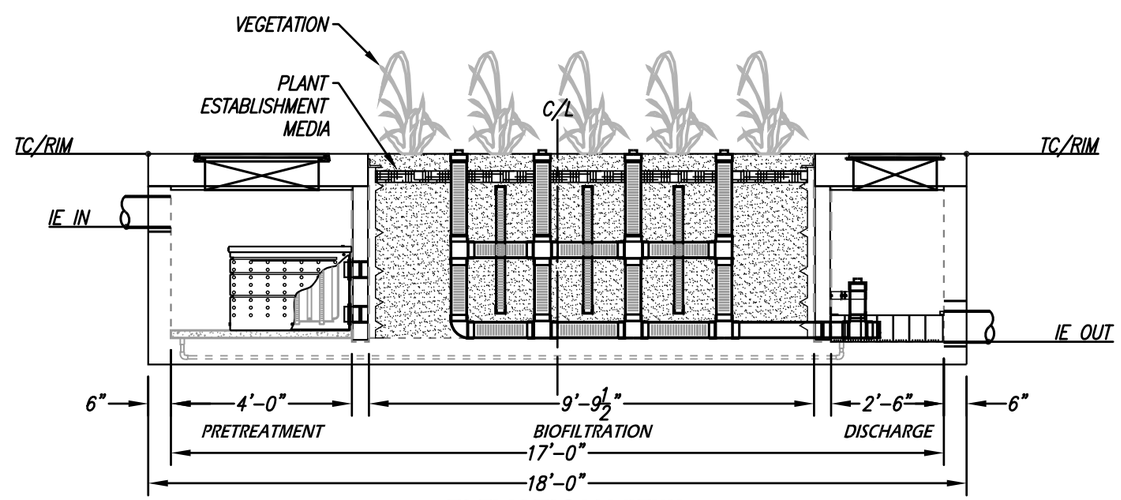

ELEVATION VIEW

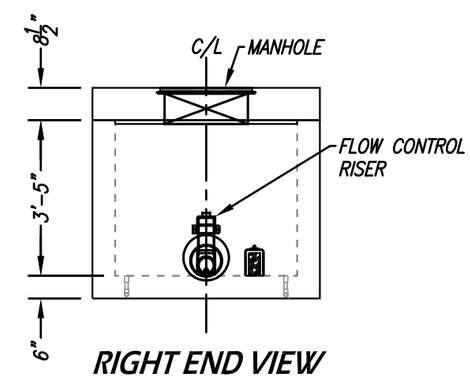

RIGHT END VIEW

INSTALLATION NOTES

1. CONTRACTOR TO PROVIDE ALL LABOR, EQUIPMENT, MATERIALS AND INCIDENTALS REQUIRED TO OFFLOAD AND INSTALL THE SYSTEM AND APPURTENANCES IN ACCORDANCE WITH THIS DRAWING AND THE MANUFACTURERS SPECIFICATIONS, UNLESS OTHERWISE STATED IN MANUFACTURERS CONTRACT.
2. UNIT MUST BE INSTALLED ON LEVEL BASE. MANUFACTURER RECOMMENDS A MINIMUM 6" LEVEL ROCK BASE UNLESS SPECIFIED BY THE PROJECT ENGINEER. CONTRACTOR IS RESPONSIBLE TO VERIFY PROJECT ENGINEERS RECOMMENDED BASE SPECIFICATIONS.
3. ALL PIPES MUST BE FLUSH WITH INSIDE SURFACE OF CONCRETE. (PIPES CANNOT INTRUDE BEYOND FLUSH). INVERT OF OUTFLOW PIPE MUST BE FLUSH WITH DISCHARGE CHAMBER FLOOR. ALL GAPS AROUND PIPES SHALL BE SEALED WATER TIGHT WITH A NON-SHRINK GROUT PER MANUFACTURERS STANDARD CONNECTION DETAIL AND SHALL MEET OR EXCEED REGIONAL PIPE CONNECTION STANDARDS.
4. CONTRACTOR TO SUPPLY AND INSTALL ALL EXTERNAL CONNECTING PIPES.
5. CONTRACTOR RESPONSIBLE FOR INSTALLATION OF ALL RISERS, MANHOLES, AND HATCHES. CONTRACTOR TO GROUT ALL MANHOLES AND HATCHES TO MATCH FINISHED SURFACE UNLESS SPECIFIED OTHERWISE.
6. DRIP OR SPRAY IRRIGATION REQUIRED ON ALL UNITS WITH VEGETATION.

GENERAL NOTES

1. MANUFACTURER TO PROVIDE ALL MATERIALS UNLESS OTHERWISE NOTED.
2. ALL DIMENSIONS, ELEVATIONS, SPECIFICATIONS AND CAPACITIES ARE SUBJECT TO CHANGE. FOR PROJECT SPECIFIC DRAWINGS DETAILING EXACT DIMENSIONS, WEIGHTS AND ACCESSORIES PLEASE CONTACT MANUFACTURER.

TREATMENT FLOW (CFS)	0.206
OPERATING HEAD (FT)	3.4
PRETREATMENT LOADING RATE (GPM/SF)	TBD
WETLAND MEDIA LOADING RATE (GPM/SF)	1.0

THE PRODUCT DESCRIBED MAY BE PROTECTED BY ONE OR MORE OF THE FOLLOWING US PATENTS: 7,425,262; 7,470,362; 7,674,378; 8,303,816; RELATED FOREIGN PATENTS OR OTHER PATENTS PENDING

PROPRIETARY AND CONFIDENTIAL:

THE INFORMATION CONTAINED IN THIS DRAWING IS THE SOLE PROPERTY OF MODULAR WETLANDS SYSTEMS. ANY REPRODUCTION IN PART OR AS A WHOLE WITHOUT THE WRITTEN PERMISSION OF MODULAR WETLANDS SYSTEMS IS PROHIBITED.

MODULAR WETLANDS
www.ModularWetlands.com | (855) 5MOD-WET

MWS-L-4-17-V
STORMWATER BIOFILTRATION SYSTEM STANDARD DETAIL

SITE SPECIFIC DATA			
PROJECT NAME		20-750 Meridian Upper Plateau	
PROJECT LOCATION		Riverside, CA	
STRUCTURE ID		9-2D	
TREATMENT REQUIRED			
VOLUME BASED (CF)		FLOW BASED (CFS)	
7,122			
TREATMENT HGL AVAILABLE (FT)			
PEAK BYPASS REQUIRED (CFS) – IF APPLICABLE			
PIPE DATA	I.E.	MATERIAL	DIAMETER
INLET PIPE 1			
INLET PIPE 2			
OUTLET PIPE			
	PRETREATMENT	BIOFILTRATION	DISCHARGE
RIM ELEVATION			
SURFACE LOAD	PARKWAY	OPEN PLANTER	PARKWAY
FRAME & COVER	ø30"	N/A	ø24"
WETLANDMEDIA VOLUME (CY)			5.41
WETLANDMEDIA DELIVERY METHOD			TBD
ORIFICE SIZE (DIA. INCHES)			ø2.05"
MAXIMUM PICK WEIGHT (LBS)			36000
NOTES:			

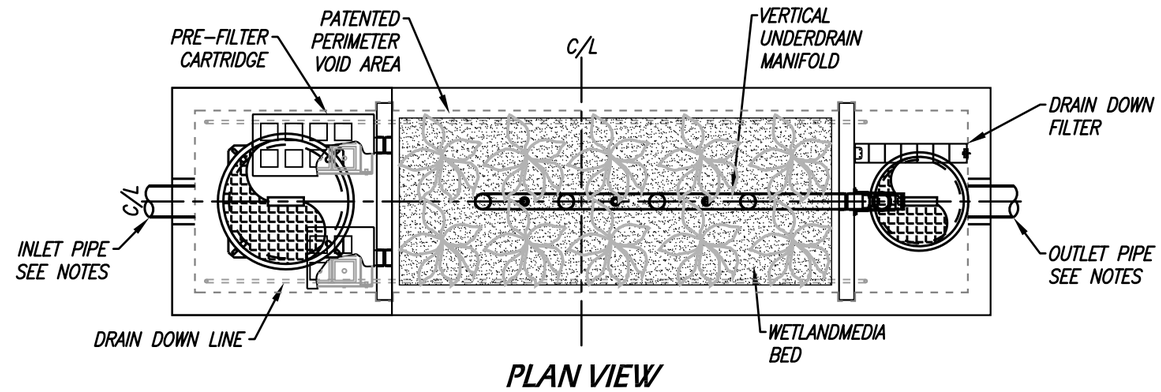

PLAN VIEW

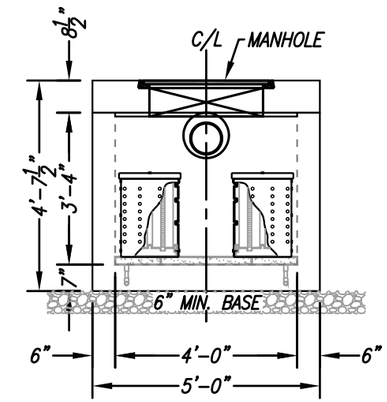

LEFT END VIEW

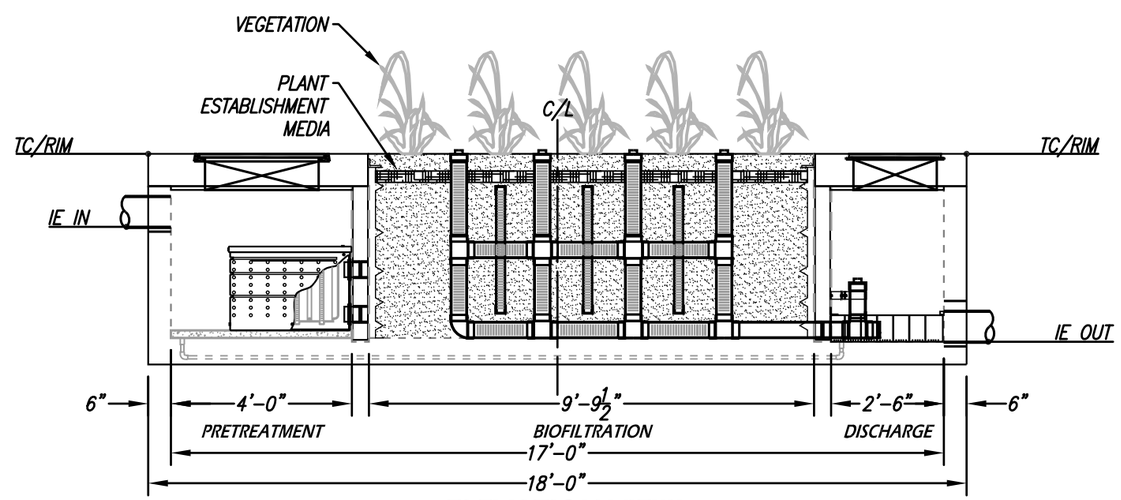

ELEVATION VIEW

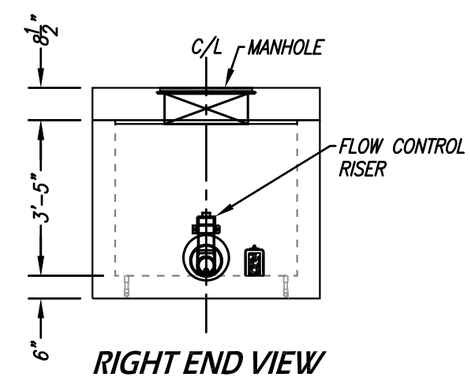

RIGHT END VIEW

INSTALLATION NOTES

1. CONTRACTOR TO PROVIDE ALL LABOR, EQUIPMENT, MATERIALS AND INCIDENTALS REQUIRED TO OFFLOAD AND INSTALL THE SYSTEM AND APPURTENANCES IN ACCORDANCE WITH THIS DRAWING AND THE MANUFACTURERS SPECIFICATIONS, UNLESS OTHERWISE STATED IN MANUFACTURERS CONTRACT.
2. UNIT MUST BE INSTALLED ON LEVEL BASE. MANUFACTURER RECOMMENDS A MINIMUM 6" LEVEL ROCK BASE UNLESS SPECIFIED BY THE PROJECT ENGINEER. CONTRACTOR IS RESPONSIBLE TO VERIFY PROJECT ENGINEERS RECOMMENDED BASE SPECIFICATIONS.
3. ALL PIPES MUST BE FLUSH WITH INSIDE SURFACE OF CONCRETE. (PIPES CANNOT INTRUDE BEYOND FLUSH). INVERT OF OUTFLOW PIPE MUST BE FLUSH WITH DISCHARGE CHAMBER FLOOR. ALL GAPS AROUND PIPES SHALL BE SEALED WATER TIGHT WITH A NON-SHRINK GROUT PER MANUFACTURERS STANDARD CONNECTION DETAIL AND SHALL MEET OR EXCEED REGIONAL PIPE CONNECTION STANDARDS.
4. CONTRACTOR TO SUPPLY AND INSTALL ALL EXTERNAL CONNECTING PIPES.
5. CONTRACTOR RESPONSIBLE FOR INSTALLATION OF ALL RISERS, MANHOLES, AND HATCHES. CONTRACTOR TO GROUT ALL MANHOLES AND HATCHES TO MATCH FINISHED SURFACE UNLESS SPECIFIED OTHERWISE.
6. DRIP OR SPRAY IRRIGATION REQUIRED ON ALL UNITS WITH VEGETATION.

GENERAL NOTES

1. MANUFACTURER TO PROVIDE ALL MATERIALS UNLESS OTHERWISE NOTED.
2. ALL DIMENSIONS, ELEVATIONS, SPECIFICATIONS AND CAPACITIES ARE SUBJECT TO CHANGE. FOR PROJECT SPECIFIC DRAWINGS DETAILING EXACT DIMENSIONS, WEIGHTS AND ACCESSORIES PLEASE CONTACT MANUFACTURER.

TREATMENT FLOW (CFS)	0.206
OPERATING HEAD (FT)	3.4
PRETREATMENT LOADING RATE (GPM/SF)	TBD
WETLAND MEDIA LOADING RATE (GPM/SF)	1.0

THE PRODUCT DESCRIBED MAY BE PROTECTED BY ONE OR MORE OF THE FOLLOWING US PATENTS: 7,425,262; 7,470,362; 7,674,378; 8,303,816; RELATED FOREIGN PATENTS OR OTHER PATENTS PENDING

PROPRIETARY AND CONFIDENTIAL:

THE INFORMATION CONTAINED IN THIS DRAWING IS THE SOLE PROPERTY OF MODULAR WETLANDS SYSTEMS. ANY REPRODUCTION IN PART OR AS A WHOLE WITHOUT THE WRITTEN PERMISSION OF MODULAR WETLANDS SYSTEMS IS PROHIBITED.

MODULAR WETLANDS
www.ModularWetlands.com | (855) 5MOD-WET

MWS-L-4-17-V
STORMWATER BIOFILTRATION SYSTEM STANDARD DETAIL

SITE SPECIFIC DATA			
PROJECT NAME		20-750 Meridian Upper Plateau	
PROJECT LOCATION		Riverside, CA	
STRUCTURE ID		9-3D	
TREATMENT REQUIRED			
VOLUME BASED (CF)		FLOW BASED (CFS)	
8,927			
TREATMENT HGL AVAILABLE (FT)			
PEAK BYPASS REQUIRED (CFS) – IF APPLICABLE			
PIPE DATA	I.E.	MATERIAL	DIAMETER
INLET PIPE 1			
INLET PIPE 2			
OUTLET PIPE			
	PRETREATMENT	BIOFILTRATION	DISCHARGE
RIM ELEVATION			
SURFACE LOAD	PARKWAY	OPEN PLANTER	PARKWAY
FRAME & COVER	ø30"	N/A	ø24"
WETLANDMEDIA VOLUME (CY)			6.52
WETLANDMEDIA DELIVERY METHOD			TBD
ORIFICE SIZE (DIA. INCHES)			ø2.20"
MAXIMUM PICK WEIGHT (LBS)			40000
NOTES:			

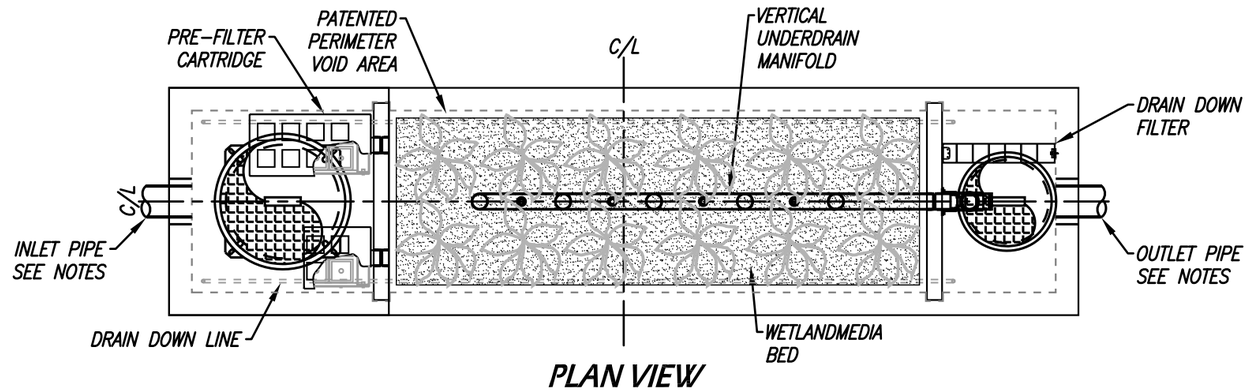

PLAN VIEW

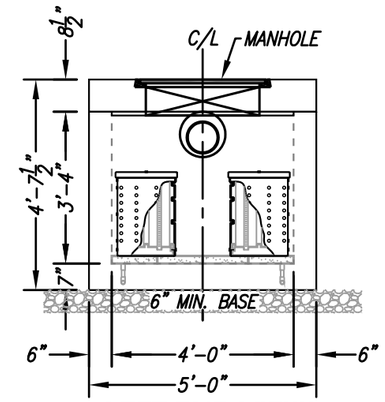

LEFT END VIEW

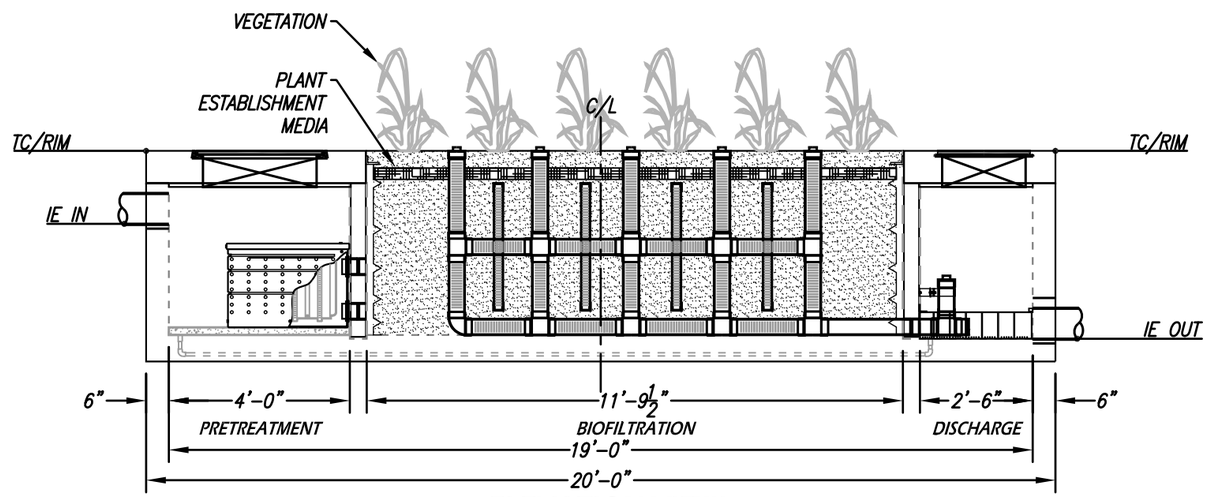

ELEVATION VIEW

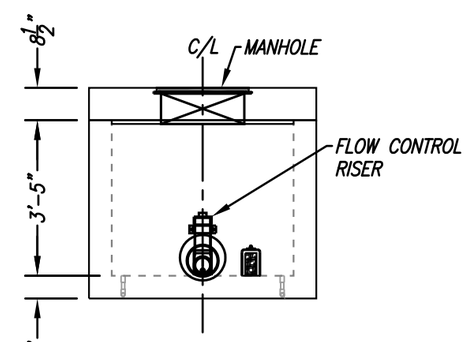

RIGHT END VIEW

INSTALLATION NOTES

1. CONTRACTOR TO PROVIDE ALL LABOR, EQUIPMENT, MATERIALS AND INCIDENTALS REQUIRED TO OFFLOAD AND INSTALL THE SYSTEM AND APPURTENANCES IN ACCORDANCE WITH THIS DRAWING AND THE MANUFACTURERS SPECIFICATIONS, UNLESS OTHERWISE STATED IN MANUFACTURERS CONTRACT.
2. UNIT MUST BE INSTALLED ON LEVEL BASE. MANUFACTURER RECOMMENDS A MINIMUM 6" LEVEL ROCK BASE UNLESS SPECIFIED BY THE PROJECT ENGINEER. CONTRACTOR IS RESPONSIBLE TO VERIFY PROJECT ENGINEERS RECOMMENDED BASE SPECIFICATIONS.
3. ALL PIPES MUST BE FLUSH WITH INSIDE SURFACE OF CONCRETE. (PIPES CANNOT INTRUDE BEYOND FLUSH). INVERT OF OUTFLOW PIPE MUST BE FLUSH WITH DISCHARGE CHAMBER FLOOR. ALL GAPS AROUND PIPES SHALL BE SEALED WATER TIGHT WITH A NON-SHRINK GROUT PER MANUFACTURERS STANDARD CONNECTION DETAIL AND SHALL MEET OR EXCEED REGIONAL PIPE CONNECTION STANDARDS.
4. CONTRACTOR TO SUPPLY AND INSTALL ALL EXTERNAL CONNECTING PIPES.
5. CONTRACTOR RESPONSIBLE FOR INSTALLATION OF ALL RISERS, MANHOLES, AND HATCHES. CONTRACTOR TO GROUT ALL MANHOLES AND HATCHES TO MATCH FINISHED SURFACE UNLESS SPECIFIED OTHERWISE.
6. DRIP OR SPRAY IRRIGATION REQUIRED ON ALL UNITS WITH VEGETATION.

GENERAL NOTES

1. MANUFACTURER TO PROVIDE ALL MATERIALS UNLESS OTHERWISE NOTED.
2. ALL DIMENSIONS, ELEVATIONS, SPECIFICATIONS AND CAPACITIES ARE SUBJECT TO CHANGE. FOR PROJECT SPECIFIC DRAWINGS DETAILING EXACT DIMENSIONS, WEIGHTS AND ACCESSORIES PLEASE CONTACT MANUFACTURER.

TREATMENT FLOW (CFS)	0.237
OPERATING HEAD (FT)	3.4
PRETREATMENT LOADING RATE (GPM/SF)	TBD
WETLAND MEDIA LOADING RATE (GPM/SF)	1.0

THE PRODUCT DESCRIBED MAY BE PROTECTED BY ONE OR MORE OF THE FOLLOWING US PATENTS: 7,425,262; 7,470,362; 7,674,378; 8,303,816; RELATED FOREIGN PATENTS OR OTHER PATENTS PENDING

PROPRIETARY AND CONFIDENTIAL:

THE INFORMATION CONTAINED IN THIS DRAWING IS THE SOLE PROPERTY OF MODULAR WETLANDS SYSTEMS. ANY REPRODUCTION IN PART OR AS A WHOLE WITHOUT THE WRITTEN PERMISSION OF MODULAR WETLANDS SYSTEMS IS PROHIBITED.

MODULAR WETLANDS
www.ModularWetlands.com | (855) 5MOD-WET

MWS-L-4-19-V
STORMWATER BIOFILTRATION SYSTEM STANDARD DETAIL

SITE SPECIFIC DATA			
PROJECT NAME		20-750 Meridian Upper Plateau	
PROJECT LOCATION		Riverside, CA	
STRUCTURE ID		9-4D	
TREATMENT REQUIRED			
VOLUME BASED (CF)		FLOW BASED (CFS)	
9,018			
TREATMENT HGL AVAILABLE (FT)			
PEAK BYPASS REQUIRED (CFS) – IF APPLICABLE			
PIPE DATA	I.E.	MATERIAL	DIAMETER
INLET PIPE 1			
INLET PIPE 2			
OUTLET PIPE			
	PRETREATMENT	BIOFILTRATION	DISCHARGE
RIM ELEVATION			
SURFACE LOAD	PARKWAY	OPEN PLANTER	PARKWAY
FRAME & COVER	ø30"	N/A	ø24"
WETLANDMEDIA VOLUME (CY)			7.63
WETLANDMEDIA DELIVERY METHOD			TBD
ORIFICE SIZE (DIA. INCHES)			ø2.34"
MAXIMUM PICK WEIGHT (LBS)			43000
NOTES:			

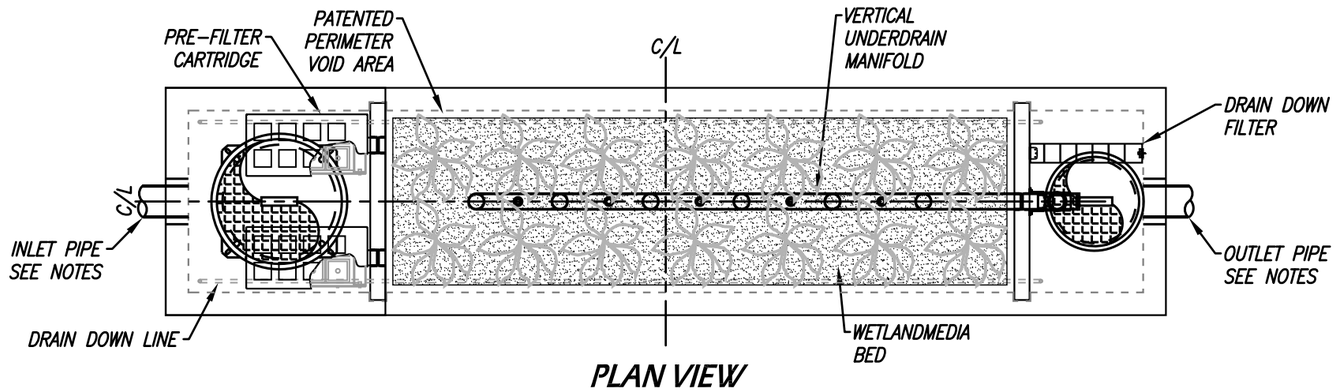

PLAN VIEW

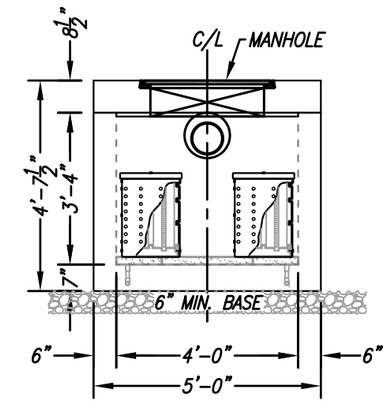

LEFT END VIEW

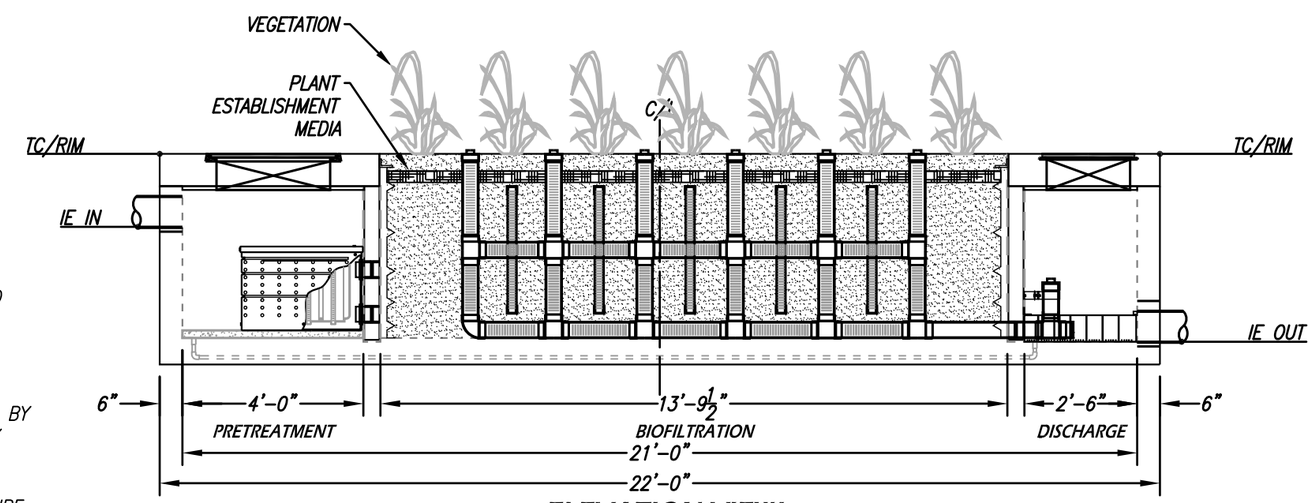

ELEVATION VIEW

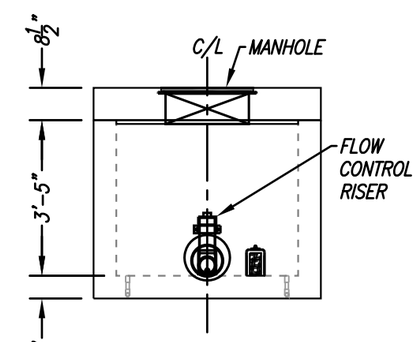

RIGHT END VIEW

INSTALLATION NOTES

1. CONTRACTOR TO PROVIDE ALL LABOR, EQUIPMENT, MATERIALS AND INCIDENTALS REQUIRED TO OFFLOAD AND INSTALL THE SYSTEM AND APPURTENANCES IN ACCORDANCE WITH THIS DRAWING AND THE MANUFACTURERS SPECIFICATIONS, UNLESS OTHERWISE STATED IN MANUFACTURERS CONTRACT.
2. UNIT MUST BE INSTALLED ON LEVEL BASE. MANUFACTURER RECOMMENDS A MINIMUM 6" LEVEL ROCK BASE UNLESS SPECIFIED BY THE PROJECT ENGINEER. CONTRACTOR IS RESPONSIBLE TO VERIFY PROJECT ENGINEERS RECOMMENDED BASE SPECIFICATIONS.
3. ALL PIPES MUST BE FLUSH WITH INSIDE SURFACE OF CONCRETE. (PIPES CANNOT INTRUDE BEYOND FLUSH). INVERT OF OUTFLOW PIPE MUST BE FLUSH WITH DISCHARGE CHAMBER FLOOR. ALL GAPS AROUND PIPES SHALL BE SEALED WATER TIGHT WITH A NON-SHRINK GROUT PER MANUFACTURERS STANDARD CONNECTION DETAIL AND SHALL MEET OR EXCEED REGIONAL PIPE CONNECTION STANDARDS.
4. CONTRACTOR TO SUPPLY AND INSTALL ALL EXTERNAL CONNECTING PIPES.
5. CONTRACTOR RESPONSIBLE FOR INSTALLATION OF ALL RISERS, MANHOLES, AND HATCHES. CONTRACTOR TO GROUT ALL MANHOLES AND HATCHES TO MATCH FINISHED SURFACE UNLESS SPECIFIED OTHERWISE.
6. DRIP OR SPRAY IRRIGATION REQUIRED ON ALL UNITS WITH VEGETATION.

GENERAL NOTES

1. MANUFACTURER TO PROVIDE ALL MATERIALS UNLESS OTHERWISE NOTED.
2. ALL DIMENSIONS, ELEVATIONS, SPECIFICATIONS AND CAPACITIES ARE SUBJECT TO CHANGE. FOR PROJECT SPECIFIC DRAWINGS DETAILING EXACT DIMENSIONS, WEIGHTS AND ACCESSORIES PLEASE CONTACT MANUFACTURER.

TREATMENT FLOW (CFS)	0.268
OPERATING HEAD (FT)	3.4
PRETREATMENT LOADING RATE (GPM/SF)	TBD
WETLAND MEDIA LOADING RATE (GPM/SF)	1.0

THE PRODUCT DESCRIBED MAY BE PROTECTED BY ONE OR MORE OF THE FOLLOWING US PATENTS: 7,425,262; 7,470,362; 7,674,378; 8,303,816; RELATED FOREIGN PATENTS OR OTHER PATENTS PENDING

PROPRIETARY AND CONFIDENTIAL:

THE INFORMATION CONTAINED IN THIS DRAWING IS THE SOLE PROPERTY OF MODULAR WETLANDS SYSTEMS. ANY REPRODUCTION IN PART OR AS A WHOLE WITHOUT THE WRITTEN PERMISSION OF MODULAR WETLANDS SYSTEMS IS PROHIBITED.

MODULAR WETLANDS
www.ModularWetlands.com | (855) 5MOD-WET

MWS-L-4-21-V
STORMWATER BIOFILTRATION SYSTEM STANDARD DETAIL

SITE SPECIFIC DATA			
PROJECT NAME		20-750 Meridian Upper Plateau	
PROJECT LOCATION		Riverside, CA	
STRUCTURE ID		9-5D	
TREATMENT REQUIRED			
VOLUME BASED (CF)		FLOW BASED (CFS)	
7,397			
TREATMENT HGL AVAILABLE (FT)			
PEAK BYPASS REQUIRED (CFS) – IF APPLICABLE			
PIPE DATA	I.E.	MATERIAL	DIAMETER
INLET PIPE 1			
INLET PIPE 2			
OUTLET PIPE			
	PRETREATMENT	BIOFILTRATION	DISCHARGE
RIM ELEVATION			
SURFACE LOAD	PARKWAY	OPEN PLANTER	PARKWAY
FRAME & COVER	ø30"	N/A	ø24"
WETLANDMEDIA VOLUME (CY)			5.41
WETLANDMEDIA DELIVERY METHOD			TBD
ORIFICE SIZE (DIA. INCHES)			ø2.05"
MAXIMUM PICK WEIGHT (LBS)			36000
NOTES:			

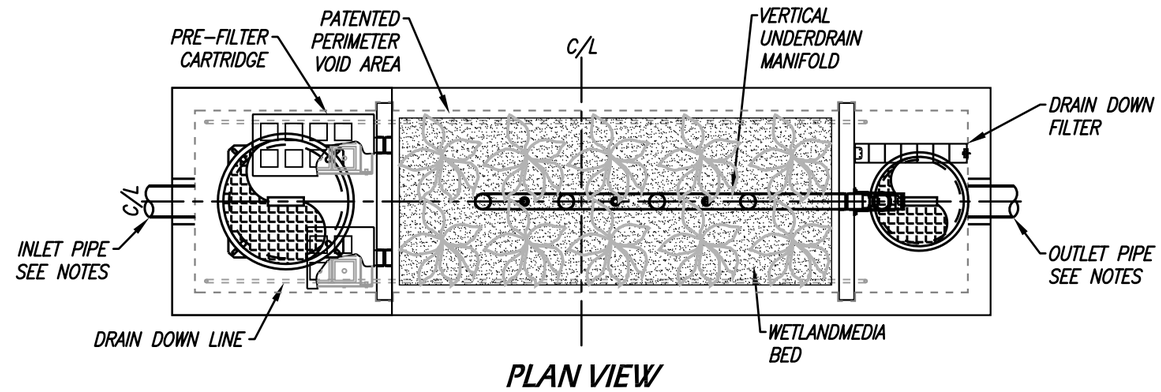

PLAN VIEW

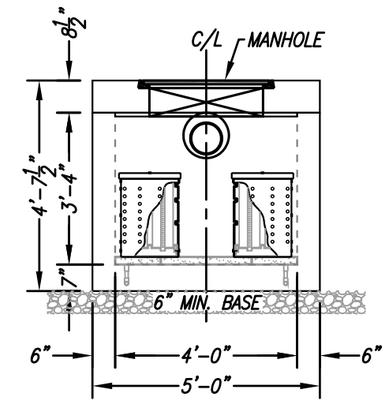

LEFT END VIEW

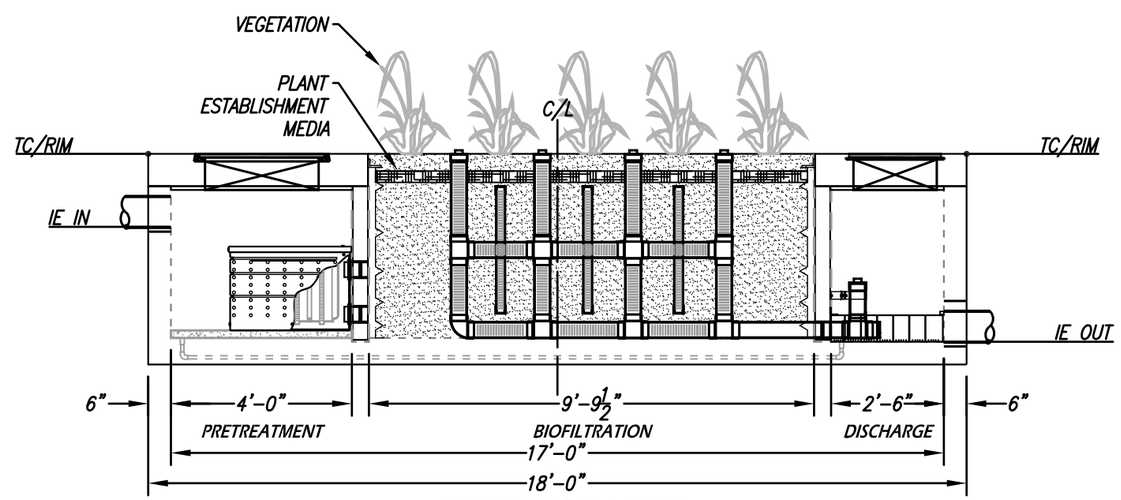

ELEVATION VIEW

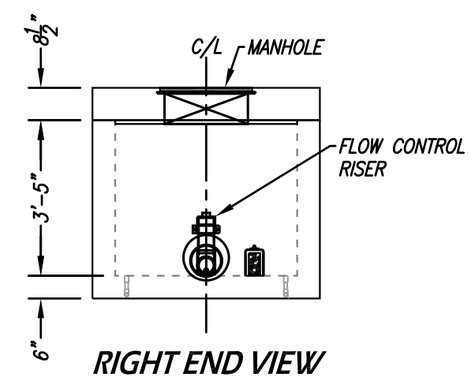

RIGHT END VIEW

INSTALLATION NOTES

1. CONTRACTOR TO PROVIDE ALL LABOR, EQUIPMENT, MATERIALS AND INCIDENTALS REQUIRED TO OFFLOAD AND INSTALL THE SYSTEM AND APPURTENANCES IN ACCORDANCE WITH THIS DRAWING AND THE MANUFACTURERS SPECIFICATIONS, UNLESS OTHERWISE STATED IN MANUFACTURERS CONTRACT.
2. UNIT MUST BE INSTALLED ON LEVEL BASE. MANUFACTURER RECOMMENDS A MINIMUM 6" LEVEL ROCK BASE UNLESS SPECIFIED BY THE PROJECT ENGINEER. CONTRACTOR IS RESPONSIBLE TO VERIFY PROJECT ENGINEERS RECOMMENDED BASE SPECIFICATIONS.
3. ALL PIPES MUST BE FLUSH WITH INSIDE SURFACE OF CONCRETE. (PIPES CANNOT INTRUDE BEYOND FLUSH). INVERT OF OUTFLOW PIPE MUST BE FLUSH WITH DISCHARGE CHAMBER FLOOR. ALL GAPS AROUND PIPES SHALL BE SEALED WATER TIGHT WITH A NON-SHRINK GROUT PER MANUFACTURERS STANDARD CONNECTION DETAIL AND SHALL MEET OR EXCEED REGIONAL PIPE CONNECTION STANDARDS.
4. CONTRACTOR TO SUPPLY AND INSTALL ALL EXTERNAL CONNECTING PIPES.
5. CONTRACTOR RESPONSIBLE FOR INSTALLATION OF ALL RISERS, MANHOLES, AND HATCHES. CONTRACTOR TO GROUT ALL MANHOLES AND HATCHES TO MATCH FINISHED SURFACE UNLESS SPECIFIED OTHERWISE.
6. DRIP OR SPRAY IRRIGATION REQUIRED ON ALL UNITS WITH VEGETATION.

GENERAL NOTES

1. MANUFACTURER TO PROVIDE ALL MATERIALS UNLESS OTHERWISE NOTED.
2. ALL DIMENSIONS, ELEVATIONS, SPECIFICATIONS AND CAPACITIES ARE SUBJECT TO CHANGE. FOR PROJECT SPECIFIC DRAWINGS DETAILING EXACT DIMENSIONS, WEIGHTS AND ACCESSORIES PLEASE CONTACT MANUFACTURER.

TREATMENT FLOW (CFS)	0.206
OPERATING HEAD (FT)	3.4
PRETREATMENT LOADING RATE (GPM/SF)	TBD
WETLAND MEDIA LOADING RATE (GPM/SF)	1.0

THE PRODUCT DESCRIBED MAY BE PROTECTED BY ONE OR MORE OF THE FOLLOWING US PATENTS: 7,425,262; 7,470,362; 7,674,378; 8,303,816; RELATED FOREIGN PATENTS OR OTHER PATENTS PENDING

PROPRIETARY AND CONFIDENTIAL:

THE INFORMATION CONTAINED IN THIS DRAWING IS THE SOLE PROPERTY OF MODULAR WETLANDS SYSTEMS. ANY REPRODUCTION IN PART OR AS A WHOLE WITHOUT THE WRITTEN PERMISSION OF MODULAR WETLANDS SYSTEMS IS PROHIBITED.

MODULAR WETLANDS
www.ModularWetlands.com | (855) 5MOD-WET

MWS-L-4-17-V
STORMWATER BIOFILTRATION SYSTEM STANDARD DETAIL

SITE SPECIFIC DATA			
PROJECT NAME		20-750 Meridian Upper Plateau	
PROJECT LOCATION		Riverside, CA	
STRUCTURE ID		9-6D	
TREATMENT REQUIRED			
VOLUME BASED (CF)		FLOW BASED (CFS)	
9,626			
TREATMENT HGL AVAILABLE (FT)			
PEAK BYPASS REQUIRED (CFS) – IF APPLICABLE			
PIPE DATA	I.E.	MATERIAL	DIAMETER
INLET PIPE 1			
INLET PIPE 2			
OUTLET PIPE			
	PRETREATMENT	BIOFILTRATION	DISCHARGE
RIM ELEVATION			
SURFACE LOAD	PARKWAY	OPEN PLANTER	PARKWAY
FRAME & COVER	ø30"	N/A	ø24"
WETLANDMEDIA VOLUME (CY)			5.41
WETLANDMEDIA DELIVERY METHOD			TBD
ORIFICE SIZE (DIA. INCHES)			ø2.05"
MAXIMUM PICK WEIGHT (LBS)			36000
NOTES:			

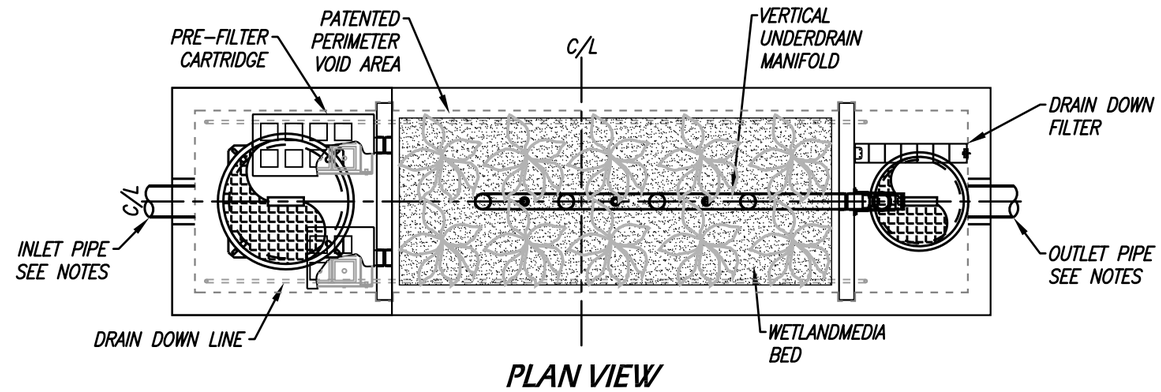

PLAN VIEW

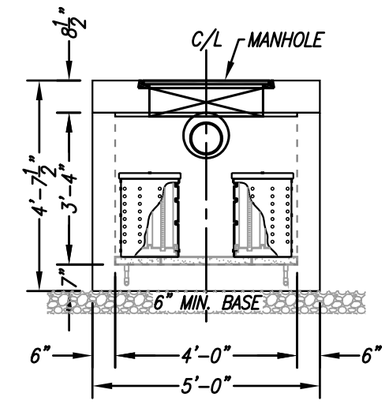

LEFT END VIEW

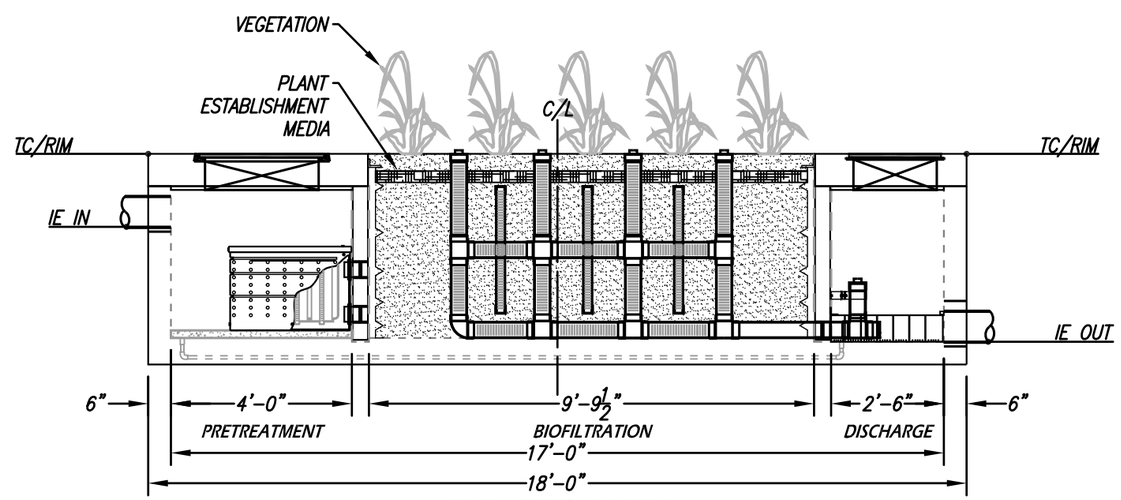

ELEVATION VIEW

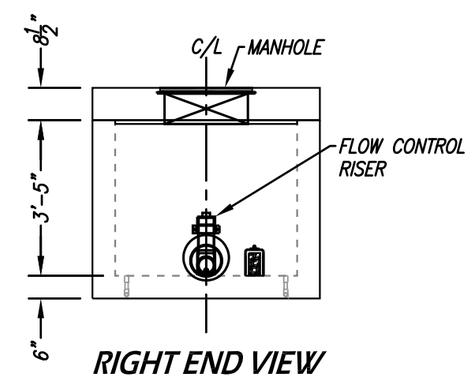

RIGHT END VIEW

INSTALLATION NOTES

1. CONTRACTOR TO PROVIDE ALL LABOR, EQUIPMENT, MATERIALS AND INCIDENTALS REQUIRED TO OFFLOAD AND INSTALL THE SYSTEM AND APPURTENANCES IN ACCORDANCE WITH THIS DRAWING AND THE MANUFACTURERS SPECIFICATIONS, UNLESS OTHERWISE STATED IN MANUFACTURERS CONTRACT.
2. UNIT MUST BE INSTALLED ON LEVEL BASE. MANUFACTURER RECOMMENDS A MINIMUM 6" LEVEL ROCK BASE UNLESS SPECIFIED BY THE PROJECT ENGINEER. CONTRACTOR IS RESPONSIBLE TO VERIFY PROJECT ENGINEERS RECOMMENDED BASE SPECIFICATIONS.
3. ALL PIPES MUST BE FLUSH WITH INSIDE SURFACE OF CONCRETE. (PIPES CANNOT INTRUDE BEYOND FLUSH). INVERT OF OUTFLOW PIPE MUST BE FLUSH WITH DISCHARGE CHAMBER FLOOR. ALL GAPS AROUND PIPES SHALL BE SEALED WATER TIGHT WITH A NON-SHRINK GROUT PER MANUFACTURERS STANDARD CONNECTION DETAIL AND SHALL MEET OR EXCEED REGIONAL PIPE CONNECTION STANDARDS.
4. CONTRACTOR TO SUPPLY AND INSTALL ALL EXTERNAL CONNECTING PIPES.
5. CONTRACTOR RESPONSIBLE FOR INSTALLATION OF ALL RISERS, MANHOLES, AND HATCHES. CONTRACTOR TO GROUT ALL MANHOLES AND HATCHES TO MATCH FINISHED SURFACE UNLESS SPECIFIED OTHERWISE.
6. DRIP OR SPRAY IRRIGATION REQUIRED ON ALL UNITS WITH VEGETATION.

GENERAL NOTES

1. MANUFACTURER TO PROVIDE ALL MATERIALS UNLESS OTHERWISE NOTED.
2. ALL DIMENSIONS, ELEVATIONS, SPECIFICATIONS AND CAPACITIES ARE SUBJECT TO CHANGE. FOR PROJECT SPECIFIC DRAWINGS DETAILING EXACT DIMENSIONS, WEIGHTS AND ACCESSORIES PLEASE CONTACT MANUFACTURER.

TREATMENT FLOW (CFS)	0.206
OPERATING HEAD (FT)	3.4
PRETREATMENT LOADING RATE (GPM/SF)	TBD
WETLAND MEDIA LOADING RATE (GPM/SF)	1.0

THE PRODUCT DESCRIBED MAY BE PROTECTED BY ONE OR MORE OF THE FOLLOWING US PATENTS: 7,425,262; 7,470,362; 7,674,378; 8,303,816; RELATED FOREIGN PATENTS OR OTHER PATENTS PENDING

PROPRIETARY AND CONFIDENTIAL:

THE INFORMATION CONTAINED IN THIS DRAWING IS THE SOLE PROPERTY OF MODULAR WETLANDS SYSTEMS. ANY REPRODUCTION IN PART OR AS A WHOLE WITHOUT THE WRITTEN PERMISSION OF MODULAR WETLANDS SYSTEMS IS PROHIBITED.

MODULAR WETLANDS
www.ModularWetlands.com | (855) 5MOD-WET

MWS-L-4-17-V
STORMWATER BIOFILTRATION SYSTEM STANDARD DETAIL

SITE SPECIFIC DATA			
PROJECT NAME		20-750 Meridian Upper Plateau	
PROJECT LOCATION		Riverside, CA	
STRUCTURE ID		9-7D	
TREATMENT REQUIRED			
VOLUME BASED (CF)		FLOW BASED (CFS)	
3,338			
TREATMENT HGL AVAILABLE (FT)			
PEAK BYPASS REQUIRED (CFS) – IF APPLICABLE			
PIPE DATA	I.E.	MATERIAL	DIAMETER
INLET PIPE 1			
INLET PIPE 2			
OUTLET PIPE			
	PRETREATMENT	BIOFILTRATION	DISCHARGE
RIM ELEVATION			
SURFACE LOAD	PARKWAY	OPEN PLANTER	PARKWAY
FRAME & COVER	ø30"	N/A	ø24"
WETLANDMEDIA VOLUME (CY)			3.05
WETLANDMEDIA DELIVERY METHOD			TBD
ORIFICE SIZE (DIA. INCHES)			ø1.71"
MAXIMUM PICK WEIGHT (LBS)			27000
NOTES:			

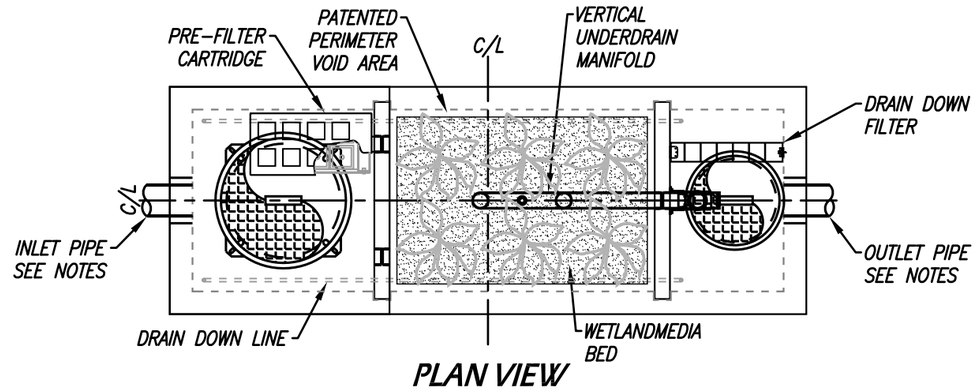

PLAN VIEW

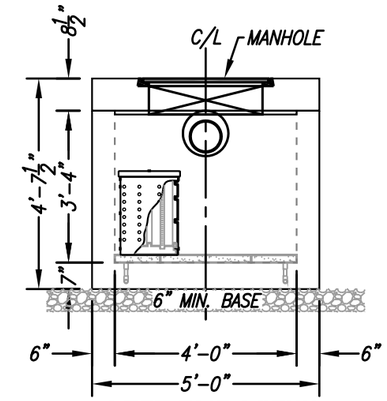

LEFT END VIEW

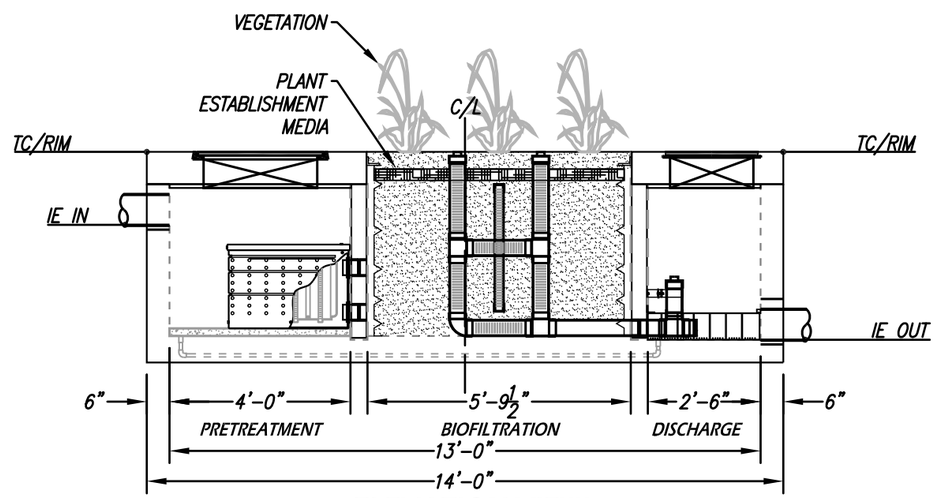

ELEVATION VIEW

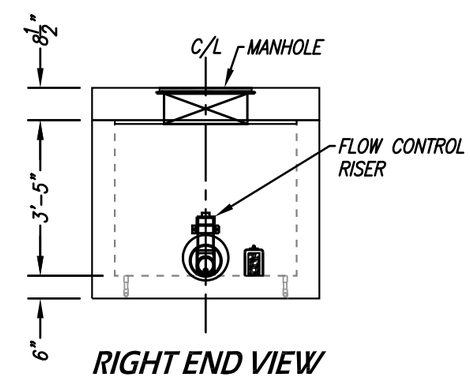

RIGHT END VIEW

INSTALLATION NOTES

1. CONTRACTOR TO PROVIDE ALL LABOR, EQUIPMENT, MATERIALS AND INCIDENTALS REQUIRED TO OFFLOAD AND INSTALL THE SYSTEM AND APPURTENANCES IN ACCORDANCE WITH THIS DRAWING AND THE MANUFACTURERS SPECIFICATIONS, UNLESS OTHERWISE STATED IN MANUFACTURERS CONTRACT.
2. UNIT MUST BE INSTALLED ON LEVEL BASE. MANUFACTURER RECOMMENDS A MINIMUM 6" LEVEL ROCK BASE UNLESS SPECIFIED BY THE PROJECT ENGINEER. CONTRACTOR IS RESPONSIBLE TO VERIFY PROJECT ENGINEERS RECOMMENDED BASE SPECIFICATIONS.
3. ALL PIPES MUST BE FLUSH WITH INSIDE SURFACE OF CONCRETE. (PIPES CANNOT INTRUDE BEYOND FLUSH). INVERT OF OUTFLOW PIPE MUST BE FLUSH WITH DISCHARGE CHAMBER FLOOR. ALL GAPS AROUND PIPES SHALL BE SEALED WATER TIGHT WITH A NON-SHRINK GROUT PER MANUFACTURERS STANDARD CONNECTION DETAIL AND SHALL MEET OR EXCEED REGIONAL PIPE CONNECTION STANDARDS.
4. CONTRACTOR TO SUPPLY AND INSTALL ALL EXTERNAL CONNECTING PIPES.
5. CONTRACTOR RESPONSIBLE FOR INSTALLATION OF ALL RISERS, MANHOLES, AND HATCHES. CONTRACTOR TO GROUT ALL MANHOLES AND HATCHES TO MATCH FINISHED SURFACE UNLESS SPECIFIED OTHERWISE.
6. DRIP OR SPRAY IRRIGATION REQUIRED ON ALL UNITS WITH VEGETATION.

GENERAL NOTES

1. MANUFACTURER TO PROVIDE ALL MATERIALS UNLESS OTHERWISE NOTED.
2. ALL DIMENSIONS, ELEVATIONS, SPECIFICATIONS AND CAPACITIES ARE SUBJECT TO CHANGE. FOR PROJECT SPECIFIC DRAWINGS DETAILING EXACT DIMENSIONS, WEIGHTS AND ACCESSORIES PLEASE CONTACT MANUFACTURER.

TREATMENT FLOW (CFS)	0.144
OPERATING HEAD (FT)	3.4
PRETREATMENT LOADING RATE (GPM/SF)	TBD
WETLAND MEDIA LOADING RATE (GPM/SF)	1.0

THE PRODUCT DESCRIBED MAY BE PROTECTED BY ONE OR MORE OF THE FOLLOWING US PATENTS: 7,425,262; 7,470,362; 7,674,378; 8,303,816; RELATED FOREIGN PATENTS OR OTHER PATENTS PENDING

PROPRIETARY AND CONFIDENTIAL:

THE INFORMATION CONTAINED IN THIS DRAWING IS THE SOLE PROPERTY OF MODULAR WETLANDS SYSTEMS. ANY REPRODUCTION IN PART OR AS A WHOLE WITHOUT THE WRITTEN PERMISSION OF MODULAR WETLANDS SYSTEMS IS PROHIBITED.

MODULAR WETLANDS
www.ModularWetlands.com | (855) 5MOD-WET

MWS-L-4-13-V
STORMWATER BIOFILTRATION SYSTEM STANDARD DETAIL

SITE SPECIFIC DATA			
PROJECT NUMBER		20-750 Meridian Upper Plateau	
PROJECT NAME		Riverside, CA	
PROJECT LOCATION		9-8D	
STRUCTURE ID			
TREATMENT REQUIRED			
VOLUME BASED (CF)		FLOW BASED (CFS)	
2,606			
PEAK BYPASS REQUIRED (CFS) – IF APPLICABLE			
PIPE DATA	I.E.	MATERIAL	DIAMETER
INLET PIPE 1			
INLET PIPE 2	N/A	N/A	N/A
OUTLET PIPE			
	PRETREATMENT	BIOFILTRATION	DISCHARGE
RIM ELEVATION			
SURFACE LOAD	PEDESTRIAN		
FRAME & COVER	36" X 36"	OPEN PLANTER	N/A
NOTES:			

* PRELIMINARY NOT FOR CONSTRUCTION

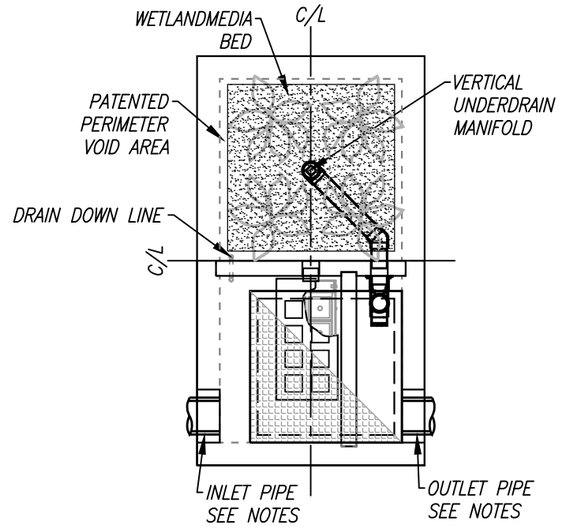

PLAN VIEW

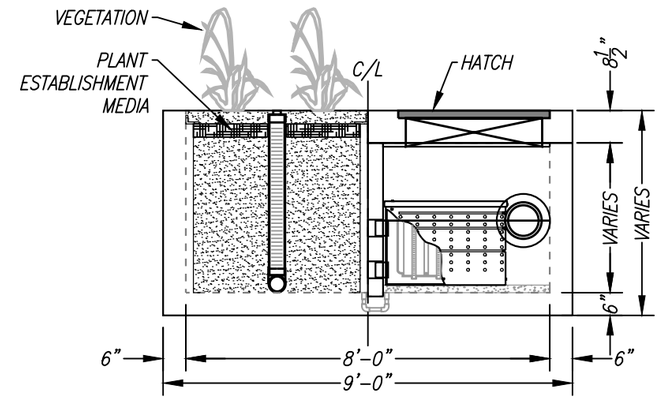

LEFT END VIEW

INSTALLATION NOTES

1. CONTRACTOR TO PROVIDE ALL LABOR, EQUIPMENT, MATERIALS AND INCIDENTALS REQUIRED TO OFFLOAD AND INSTALL THE SYSTEM AND APPURTENANCES IN ACCORDANCE WITH THIS DRAWING AND THE MANUFACTURERS SPECIFICATIONS, UNLESS OTHERWISE STATED IN MANUFACTURERS CONTRACT.
2. UNIT MUST BE INSTALLED ON LEVEL BASE. MANUFACTURER RECOMMENDS A MINIMUM 6" LEVEL ROCK BASE UNLESS SPECIFIED BY THE PROJECT ENGINEER. CONTRACTOR IS RESPONSIBLE TO VERIFY PROJECT ENGINEERS RECOMMENDED BASE SPECIFICATIONS.
4. CONTRACTOR TO SUPPLY AND INSTALL ALL EXTERNAL CONNECTING PIPES. ALL PIPES MUST BE FLUSH WITH INSIDE SURFACE OF CONCRETE. (PIPES CANNOT INTRUDE BEYOND FLUSH). INVERT OF OUTFLOW PIPE MUST BE FLUSH WITH DISCHARGE CHAMBER FLOOR. ALL PIPES SHALL BE SEALED WATER TIGHT PER MANUFACTURERS STANDARD CONNECTION DETAIL.
5. CONTRACTOR RESPONSIBLE FOR INSTALLATION OF ALL RISERS, MANHOLES, AND HATCHES. CONTRACTOR TO GROUT ALL MANHOLES AND HATCHES TO MATCH FINISHED SURFACE UNLESS SPECIFIED OTHERWISE.
6. VEGETATION SUPPLIED AND INSTALLED BY OTHERS. ALL UNITS WITH VEGETATION MUST HAVE DRIP OR SPRAY IRRIGATION SUPPLIED AND INSTALLED BY OTHERS.
7. CONTRACTOR RESPONSIBLE FOR CONTACTING BIO CLEAN FOR ACTIVATION OF UNIT. MANUFACTURERS WARRANTY IS VOID WITH OUT PROPER ACTIVATION BY A BIO CLEAN REPRESENTATIVE.

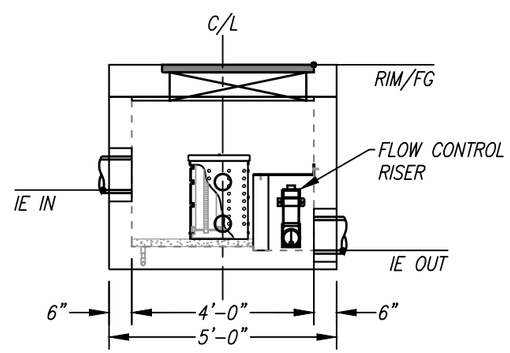

ELEVATION VIEW

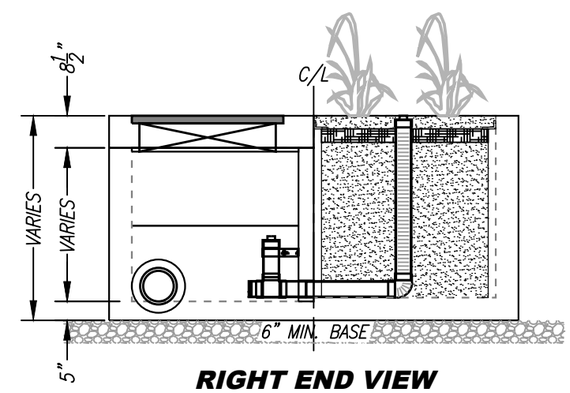

RIGHT END VIEW

GENERAL NOTES

1. MANUFACTURER TO PROVIDE ALL MATERIALS UNLESS OTHERWISE NOTED.
2. ALL DIMENSIONS, ELEVATIONS, SPECIFICATIONS AND CAPACITIES ARE SUBJECT TO CHANGE. FOR PROJECT SPECIFIC DRAWINGS DETAILING EXACT DIMENSIONS, WEIGHTS AND ACCESSORIES PLEASE CONTACT BIO CLEAN.

TREATMENT FLOW (CFS)	0.693
OPERATING HEAD (FT)	
PRETREATMENT LOADING RATE (GPM/SF)	2.0
WETLAND MEDIA LOADING RATE (GPM/SF)	1.0

MODULAR WETLANDS

THIS PRODUCT MAY BE PROTECTED BY ONE OR MORE OF THE FOLLOWING US PATENTS: 7,425,262; 7,470,362; 7,674,378; 8,303,816; RELATED FOREIGN PATENTS OR OTHER PATENTS PENDING

PROPRIETARY AND CONFIDENTIAL:

THE INFORMATION CONTAINED IN THIS DOCUMENT IS THE SOLE PROPERTY OF FORTERRA AND ITS COMPANIES. THIS DOCUMENT, NOR ANY PART THEREOF, MAY BE USED, REPRODUCED OR MODIFIED IN ANY MANNER WITH OUT THE WRITTEN CONSENT OF FORTERRA.

Bio Clean
A Forterra Company

MWS-L-4-8-V
STORMWATER BIOFILTRATION SYSTEM STANDARD DETAIL

5/23/19TOLEF

SITE SPECIFIC DATA			
PROJECT NAME		20-750 Meridian Upper Plateau	
PROJECT LOCATION		Riverside, CA	
STRUCTURE ID		9-9D	
TREATMENT REQUIRED			
VOLUME BASED (CF)		FLOW BASED (CFS)	
1,610			
TREATMENT HGL AVAILABLE (FT)			
PEAK BYPASS REQUIRED (CFS) – IF APPLICABLE			
PIPE DATA	I.E.	MATERIAL	DIAMETER
INLET PIPE 1			
INLET PIPE 2			
OUTLET PIPE			
	PRETREATMENT	BIOFILTRATION	DISCHARGE
RIM ELEVATION			
SURFACE LOAD	PARKWAY	OPEN PLANTER	PARKWAY
FRAME & COVER	24" x 42"	N/A	N/A
WETLANDMEDIA VOLUME (CY)			0.83
WETLANDMEDIA DELIVERY METHOD			TBD
ORIFICE SIZE (DIA. INCHES)			ø1.03"
MAXIMUM PICK WEIGHT (LBS)			9000
NOTES:			

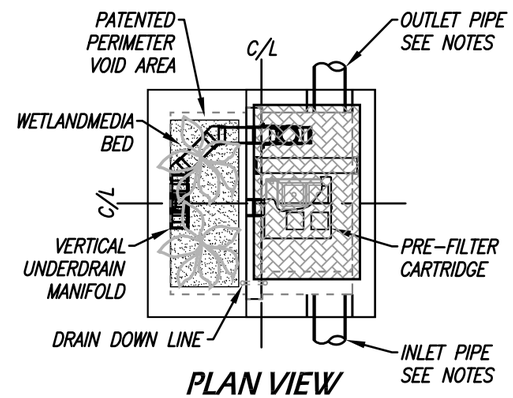

PLAN VIEW

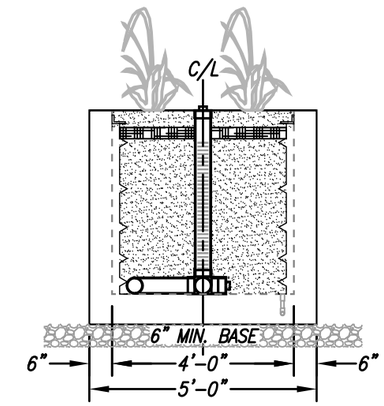

LEFT END VIEW
BIOFILTRATION

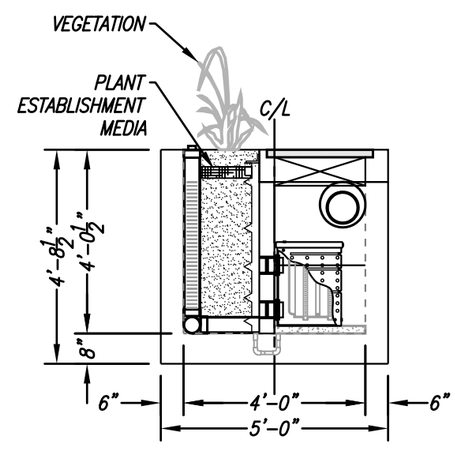

ELEVATION VIEW

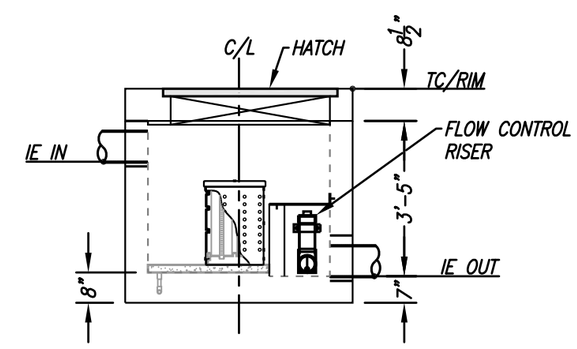

RIGHT END VIEW
PRETREATMENT/DISCHARGE

INSTALLATION NOTES

1. CONTRACTOR TO PROVIDE ALL LABOR, EQUIPMENT, MATERIALS AND INCIDENTALS REQUIRED TO OFFLOAD AND INSTALL THE SYSTEM AND APPURTENANCES IN ACCORDANCE WITH THIS DRAWING AND THE MANUFACTURERS SPECIFICATIONS, UNLESS OTHERWISE STATED IN MANUFACTURERS CONTRACT.
2. UNIT MUST BE INSTALLED ON LEVEL BASE. MANUFACTURER RECOMMENDS A MINIMUM 6" LEVEL ROCK BASE UNLESS SPECIFIED BY THE PROJECT ENGINEER. CONTRACTOR IS RESPONSIBLE TO VERIFY PROJECT ENGINEERS RECOMMENDED BASE SPECIFICATIONS.
3. ALL PIPES MUST BE FLUSH WITH INSIDE SURFACE OF CONCRETE. (PIPES CANNOT INTRUDE BEYOND FLUSH). INVERT OF OUTFLOW PIPE MUST BE FLUSH WITH DISCHARGE CHAMBER FLOOR. ALL GAPS AROUND PIPES SHALL BE SEALED WATER TIGHT WITH A NON-SHRINK GROUT PER MANUFACTURERS STANDARD CONNECTION DETAIL AND SHALL MEET OR EXCEED REGIONAL PIPE CONNECTION STANDARDS.
4. CONTRACTOR TO SUPPLY AND INSTALL ALL EXTERNAL CONNECTING PIPES.
5. CONTRACTOR RESPONSIBLE FOR INSTALLATION OF ALL RISERS, MANHOLES, AND HATCHES. CONTRACTOR TO GROUT ALL MANHOLES AND HATCHES TO MATCH FINISHED SURFACE UNLESS SPECIFIED OTHERWISE.
6. DRIP OR SPRAY IRRIGATION REQUIRED ON ALL UNITS WITH VEGETATION.

GENERAL NOTES

1. MANUFACTURER TO PROVIDE ALL MATERIALS UNLESS OTHERWISE NOTED.
2. ALL DIMENSIONS, ELEVATIONS, SPECIFICATIONS AND CAPACITIES ARE SUBJECT TO CHANGE. FOR PROJECT SPECIFIC DRAWINGS DETAILING EXACT DIMENSIONS, WEIGHTS AND ACCESSORIES PLEASE CONTACT MANUFACTURER.

TREATMENT FLOW (CFS)	0.052
OPERATING HEAD (FT)	3.4
PRETREATMENT LOADING RATE (GPM/SF)	TBD
WETLAND MEDIA LOADING RATE (GPM/SF)	1.0

THE PRODUCT DESCRIBED MAY BE PROTECTED BY ONE OR MORE OF THE FOLLOWING US PATENTS: 7,425,262; 7,470,362; 7,674,378; 8,303,816; RELATED FOREIGN PATENTS OR OTHER PATENTS PENDING

PROPRIETARY AND CONFIDENTIAL:

THE INFORMATION CONTAINED IN THIS DRAWING IS THE SOLE PROPERTY OF MODULAR WETLANDS SYSTEMS. ANY REPRODUCTION IN PART OR AS A WHOLE WITHOUT THE WRITTEN PERMISSION OF MODULAR WETLANDS SYSTEMS IS PROHIBITED.

MODULAR WETLANDS
www.ModularWetlands.com | (855) 5MOD-WET

MWS-L-4-4-V
STORMWATER BIOFILTRATION SYSTEM
STANDARD DETAIL

SITE SPECIFIC DATA			
PROJECT NAME		20-750 Meridian Upper Plateau	
PROJECT LOCATION		Riverside, CA	
STRUCTURE ID		9-10D	
TREATMENT REQUIRED			
VOLUME BASED (CF)		FLOW BASED (CFS)	
1,612			
TREATMENT HGL AVAILABLE (FT)			
PEAK BYPASS REQUIRED (CFS) – IF APPLICABLE			
PIPE DATA	I.E.	MATERIAL	DIAMETER
INLET PIPE 1			
INLET PIPE 2			
OUTLET PIPE			
	PRETREATMENT	BIOFILTRATION	DISCHARGE
RIM ELEVATION			
SURFACE LOAD	PARKWAY	OPEN PLANTER	PARKWAY
FRAME & COVER	24" x 42"	N/A	N/A
WETLANDMEDIA VOLUME (CY)			0.83
WETLANDMEDIA DELIVERY METHOD			TBD
ORIFICE SIZE (DIA. INCHES)			ø1.03"
MAXIMUM PICK WEIGHT (LBS)			9000
NOTES:			

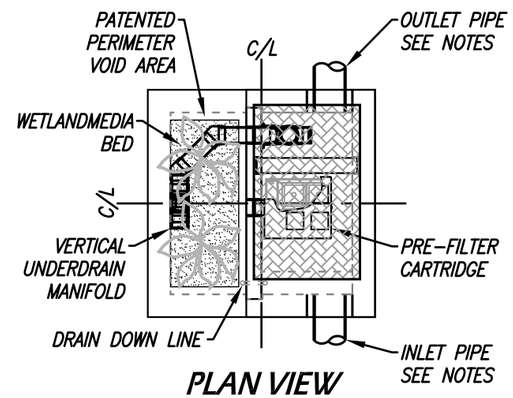

PLAN VIEW

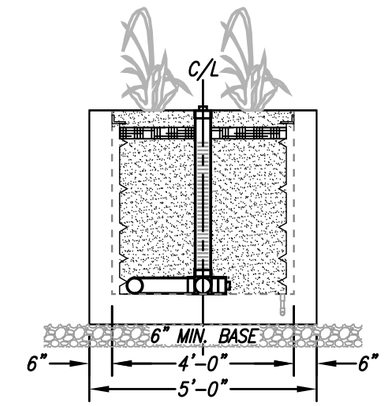

LEFT END VIEW
BIOFILTRATION

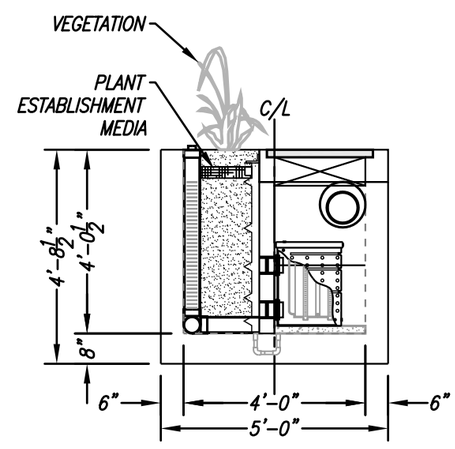

ELEVATION VIEW

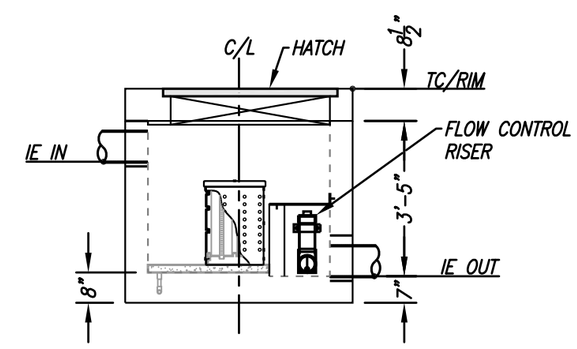

RIGHT END VIEW
PRETREATMENT/DISCHARGE

INSTALLATION NOTES

1. CONTRACTOR TO PROVIDE ALL LABOR, EQUIPMENT, MATERIALS AND INCIDENTALS REQUIRED TO OFFLOAD AND INSTALL THE SYSTEM AND APPURTENANCES IN ACCORDANCE WITH THIS DRAWING AND THE MANUFACTURERS SPECIFICATIONS, UNLESS OTHERWISE STATED IN MANUFACTURERS CONTRACT.
2. UNIT MUST BE INSTALLED ON LEVEL BASE. MANUFACTURER RECOMMENDS A MINIMUM 6" LEVEL ROCK BASE UNLESS SPECIFIED BY THE PROJECT ENGINEER. CONTRACTOR IS RESPONSIBLE TO VERIFY PROJECT ENGINEERS RECOMMENDED BASE SPECIFICATIONS.
3. ALL PIPES MUST BE FLUSH WITH INSIDE SURFACE OF CONCRETE. (PIPES CANNOT INTRUDE BEYOND FLUSH). INVERT OF OUTFLOW PIPE MUST BE FLUSH WITH DISCHARGE CHAMBER FLOOR. ALL GAPS AROUND PIPES SHALL BE SEALED WATER TIGHT WITH A NON-SHRINK GROUT PER MANUFACTURERS STANDARD CONNECTION DETAIL AND SHALL MEET OR EXCEED REGIONAL PIPE CONNECTION STANDARDS.
4. CONTRACTOR TO SUPPLY AND INSTALL ALL EXTERNAL CONNECTING PIPES.
5. CONTRACTOR RESPONSIBLE FOR INSTALLATION OF ALL RISERS, MANHOLES, AND HATCHES. CONTRACTOR TO GROUT ALL MANHOLES AND HATCHES TO MATCH FINISHED SURFACE UNLESS SPECIFIED OTHERWISE.
6. DRIP OR SPRAY IRRIGATION REQUIRED ON ALL UNITS WITH VEGETATION.

GENERAL NOTES

1. MANUFACTURER TO PROVIDE ALL MATERIALS UNLESS OTHERWISE NOTED.
2. ALL DIMENSIONS, ELEVATIONS, SPECIFICATIONS AND CAPACITIES ARE SUBJECT TO CHANGE. FOR PROJECT SPECIFIC DRAWINGS DETAILING EXACT DIMENSIONS, WEIGHTS AND ACCESSORIES PLEASE CONTACT MANUFACTURER.

TREATMENT FLOW (CFS)	0.052
OPERATING HEAD (FT)	3.4
PRETREATMENT LOADING RATE (GPM/SF)	TBD
WETLAND MEDIA LOADING RATE (GPM/SF)	1.0

THE PRODUCT DESCRIBED MAY BE PROTECTED BY ONE OR MORE OF THE FOLLOWING US PATENTS: 7,425,262; 7,470,362; 7,674,378; 8,303,816; RELATED FOREIGN PATENTS OR OTHER PATENTS PENDING

PROPRIETARY AND CONFIDENTIAL:

THE INFORMATION CONTAINED IN THIS DRAWING IS THE SOLE PROPERTY OF MODULAR WETLANDS SYSTEMS. ANY REPRODUCTION IN PART OR AS A WHOLE WITHOUT THE WRITTEN PERMISSION OF MODULAR WETLANDS SYSTEMS IS PROHIBITED.

MODULAR WETLANDS
www.ModularWetlands.com | (855) 5MOD-WET

MWS-L-4-4-V
STORMWATER BIOFILTRATION SYSTEM
STANDARD DETAIL

SITE SPECIFIC DATA			
PROJECT NAME		20-750 Meridian Upper Plateau	
PROJECT LOCATION		Riverside, CA	
STRUCTURE ID		16-1D	
TREATMENT REQUIRED			
VOLUME BASED (CF)		FLOW BASED (CFS)	
4,137			
TREATMENT HGL AVAILABLE (FT)			
PEAK BYPASS REQUIRED (CFS) – IF APPLICABLE			
PIPE DATA	I.E.	MATERIAL	DIAMETER
INLET PIPE 1			
INLET PIPE 2			
OUTLET PIPE			
	PRETREATMENT	BIOFILTRATION	DISCHARGE
RIM ELEVATION			
SURFACE LOAD	PARKWAY	OPEN PLANTER	PARKWAY
FRAME & COVER	ø30"	N/A	ø24"
WETLANDMEDIA VOLUME (CY)			3.05
WETLANDMEDIA DELIVERY METHOD			TBD
ORIFICE SIZE (DIA. INCHES)			ø1.71"
MAXIMUM PICK WEIGHT (LBS)			27000
NOTES:			

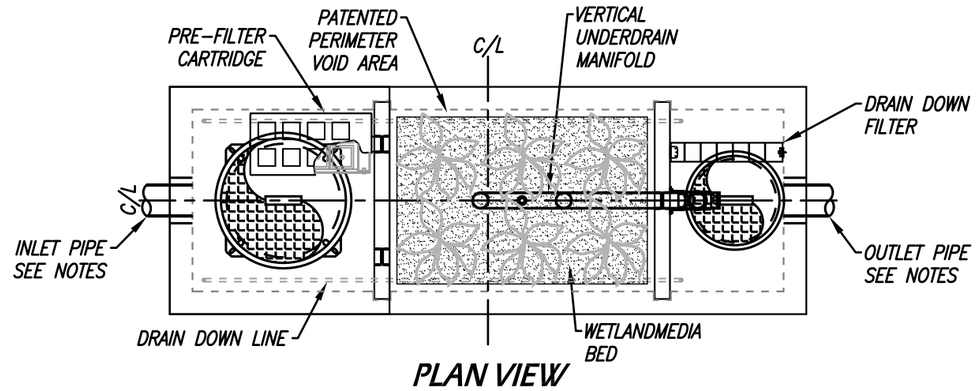

PLAN VIEW

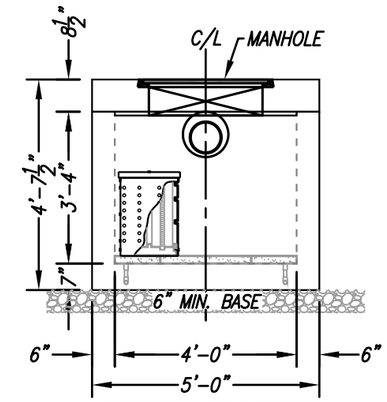

LEFT END VIEW

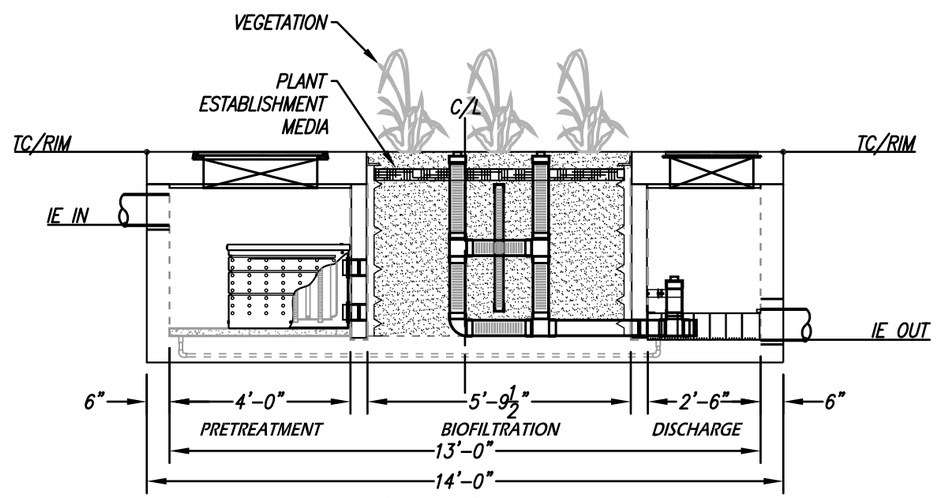

ELEVATION VIEW

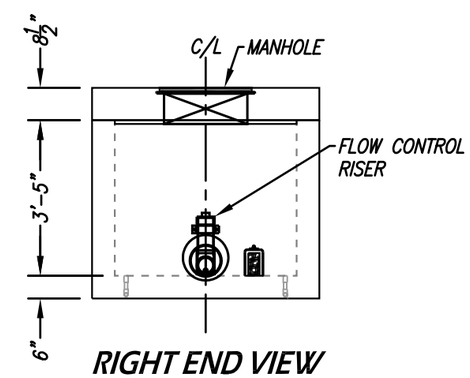

RIGHT END VIEW

INSTALLATION NOTES

1. CONTRACTOR TO PROVIDE ALL LABOR, EQUIPMENT, MATERIALS AND INCIDENTALS REQUIRED TO OFFLOAD AND INSTALL THE SYSTEM AND APPURTENANCES IN ACCORDANCE WITH THIS DRAWING AND THE MANUFACTURERS SPECIFICATIONS, UNLESS OTHERWISE STATED IN MANUFACTURERS CONTRACT.
2. UNIT MUST BE INSTALLED ON LEVEL BASE. MANUFACTURER RECOMMENDS A MINIMUM 6" LEVEL ROCK BASE UNLESS SPECIFIED BY THE PROJECT ENGINEER. CONTRACTOR IS RESPONSIBLE TO VERIFY PROJECT ENGINEERS RECOMMENDED BASE SPECIFICATIONS.
3. ALL PIPES MUST BE FLUSH WITH INSIDE SURFACE OF CONCRETE. (PIPES CANNOT INTRUDE BEYOND FLUSH). INVERT OF OUTFLOW PIPE MUST BE FLUSH WITH DISCHARGE CHAMBER FLOOR. ALL GAPS AROUND PIPES SHALL BE SEALED WATER TIGHT WITH A NON-SHRINK GROUT PER MANUFACTURERS STANDARD CONNECTION DETAIL AND SHALL MEET OR EXCEED REGIONAL PIPE CONNECTION STANDARDS.
4. CONTRACTOR TO SUPPLY AND INSTALL ALL EXTERNAL CONNECTING PIPES.
5. CONTRACTOR RESPONSIBLE FOR INSTALLATION OF ALL RISERS, MANHOLES, AND HATCHES. CONTRACTOR TO GROUT ALL MANHOLES AND HATCHES TO MATCH FINISHED SURFACE UNLESS SPECIFIED OTHERWISE.
6. DRIP OR SPRAY IRRIGATION REQUIRED ON ALL UNITS WITH VEGETATION.

GENERAL NOTES

1. MANUFACTURER TO PROVIDE ALL MATERIALS UNLESS OTHERWISE NOTED.
2. ALL DIMENSIONS, ELEVATIONS, SPECIFICATIONS AND CAPACITIES ARE SUBJECT TO CHANGE. FOR PROJECT SPECIFIC DRAWINGS DETAILING EXACT DIMENSIONS, WEIGHTS AND ACCESSORIES PLEASE CONTACT MANUFACTURER.

TREATMENT FLOW (CFS)	0.144
OPERATING HEAD (FT)	3.4
PRETREATMENT LOADING RATE (GPM/SF)	TBD
WETLAND MEDIA LOADING RATE (GPM/SF)	1.0

THE PRODUCT DESCRIBED MAY BE PROTECTED BY ONE OR MORE OF THE FOLLOWING US PATENTS: 7,425,262; 7,470,362; 7,674,378; 8,303,816; RELATED FOREIGN PATENTS OR OTHER PATENTS PENDING

PROPRIETARY AND CONFIDENTIAL:

THE INFORMATION CONTAINED IN THIS DRAWING IS THE SOLE PROPERTY OF MODULAR WETLANDS SYSTEMS. ANY REPRODUCTION IN PART OR AS A WHOLE WITHOUT THE WRITTEN PERMISSION OF MODULAR WETLANDS SYSTEMS IS PROHIBITED.

MODULAR WETLANDS
www.ModularWetlands.com | (855) 5MOD-WET

MWS-L-4-13-V
STORMWATER BIOFILTRATION SYSTEM STANDARD DETAIL

SITE SPECIFIC DATA			
PROJECT NAME		20-750 Meridian Upper Plateau	
PROJECT LOCATION		Riverside, CA	
STRUCTURE ID		16-2D	
TREATMENT REQUIRED			
VOLUME BASED (CF)		FLOW BASED (CFS)	
7,957			
TREATMENT HGL AVAILABLE (FT)			
PEAK BYPASS REQUIRED (CFS) – IF APPLICABLE			
PIPE DATA	I.E.	MATERIAL	DIAMETER
INLET PIPE 1			
INLET PIPE 2			
OUTLET PIPE			
	PRETREATMENT	BIOFILTRATION	DISCHARGE
RIM ELEVATION			
SURFACE LOAD	PARKWAY	OPEN PLANTER	PARKWAY
FRAME & COVER	ø30"	N/A	ø24"
WETLANDMEDIA VOLUME (CY)			5.41
WETLANDMEDIA DELIVERY METHOD			TBD
ORIFICE SIZE (DIA. INCHES)			ø2.05"
MAXIMUM PICK WEIGHT (LBS)			36000
NOTES:			

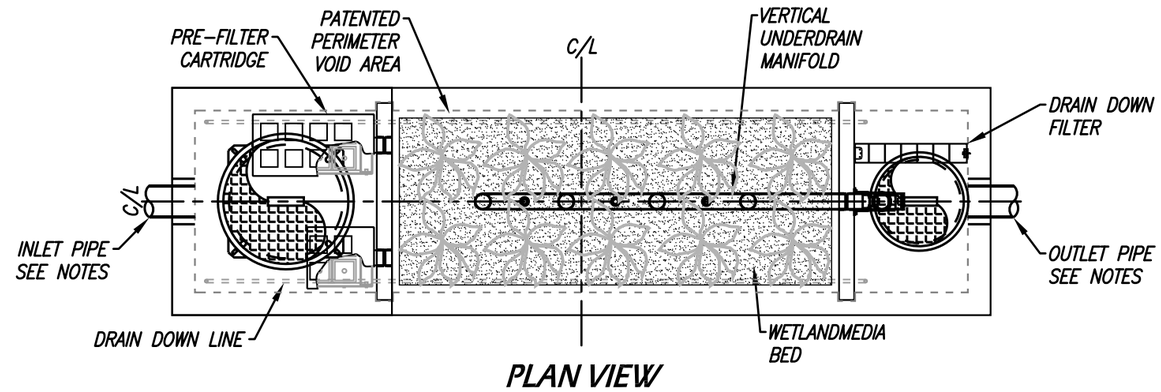

PLAN VIEW

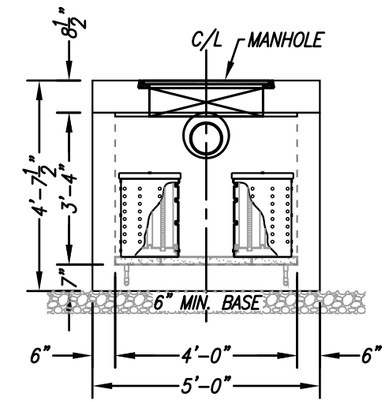

LEFT END VIEW

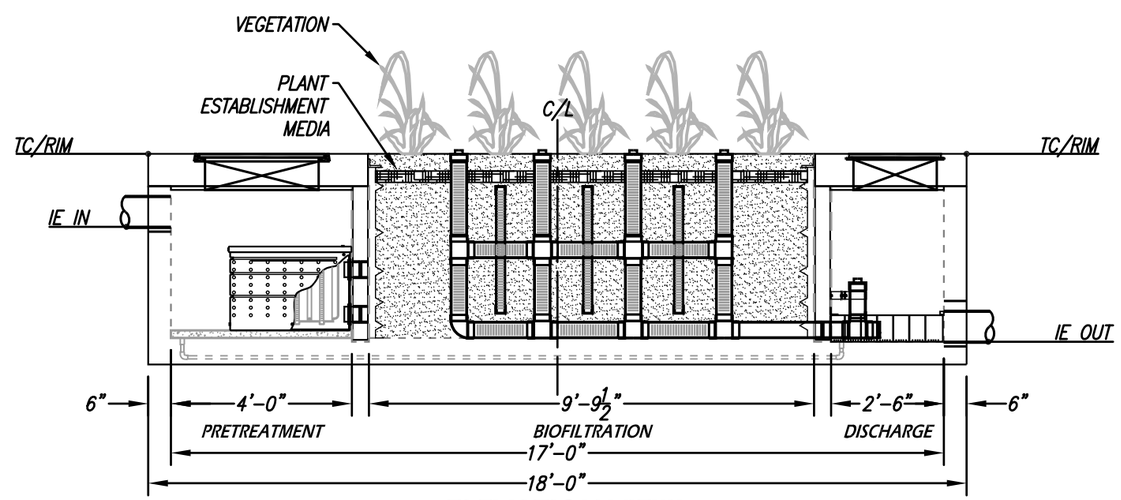

ELEVATION VIEW

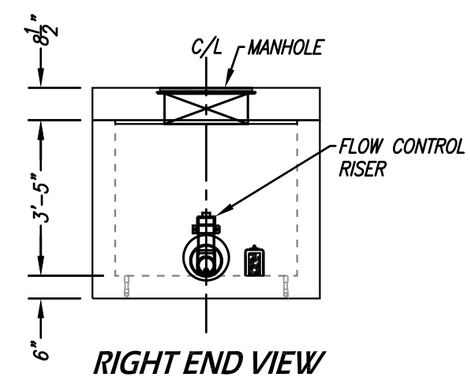

RIGHT END VIEW

INSTALLATION NOTES

1. CONTRACTOR TO PROVIDE ALL LABOR, EQUIPMENT, MATERIALS AND INCIDENTALS REQUIRED TO OFFLOAD AND INSTALL THE SYSTEM AND APPURTENANCES IN ACCORDANCE WITH THIS DRAWING AND THE MANUFACTURERS SPECIFICATIONS, UNLESS OTHERWISE STATED IN MANUFACTURERS CONTRACT.
2. UNIT MUST BE INSTALLED ON LEVEL BASE. MANUFACTURER RECOMMENDS A MINIMUM 6" LEVEL ROCK BASE UNLESS SPECIFIED BY THE PROJECT ENGINEER. CONTRACTOR IS RESPONSIBLE TO VERIFY PROJECT ENGINEERS RECOMMENDED BASE SPECIFICATIONS.
3. ALL PIPES MUST BE FLUSH WITH INSIDE SURFACE OF CONCRETE. (PIPES CANNOT INTRUDE BEYOND FLUSH). INVERT OF OUTFLOW PIPE MUST BE FLUSH WITH DISCHARGE CHAMBER FLOOR. ALL GAPS AROUND PIPES SHALL BE SEALED WATER TIGHT WITH A NON-SHRINK GROUT PER MANUFACTURERS STANDARD CONNECTION DETAIL AND SHALL MEET OR EXCEED REGIONAL PIPE CONNECTION STANDARDS.
4. CONTRACTOR TO SUPPLY AND INSTALL ALL EXTERNAL CONNECTING PIPES.
5. CONTRACTOR RESPONSIBLE FOR INSTALLATION OF ALL RISERS, MANHOLES, AND HATCHES. CONTRACTOR TO GROUT ALL MANHOLES AND HATCHES TO MATCH FINISHED SURFACE UNLESS SPECIFIED OTHERWISE.
6. DRIP OR SPRAY IRRIGATION REQUIRED ON ALL UNITS WITH VEGETATION.

GENERAL NOTES

1. MANUFACTURER TO PROVIDE ALL MATERIALS UNLESS OTHERWISE NOTED.
2. ALL DIMENSIONS, ELEVATIONS, SPECIFICATIONS AND CAPACITIES ARE SUBJECT TO CHANGE. FOR PROJECT SPECIFIC DRAWINGS DETAILING EXACT DIMENSIONS, WEIGHTS AND ACCESSORIES PLEASE CONTACT MANUFACTURER.

TREATMENT FLOW (CFS)	0.206
OPERATING HEAD (FT)	3.4
PRETREATMENT LOADING RATE (GPM/SF)	TBD
WETLAND MEDIA LOADING RATE (GPM/SF)	1.0

THE PRODUCT DESCRIBED MAY BE PROTECTED BY ONE OR MORE OF THE FOLLOWING US PATENTS: 7,425,262; 7,470,362; 7,674,378; 8,303,816; RELATED FOREIGN PATENTS OR OTHER PATENTS PENDING

PROPRIETARY AND CONFIDENTIAL:

THE INFORMATION CONTAINED IN THIS DRAWING IS THE SOLE PROPERTY OF MODULAR WETLANDS SYSTEMS. ANY REPRODUCTION IN PART OR AS A WHOLE WITHOUT THE WRITTEN PERMISSION OF MODULAR WETLANDS SYSTEMS IS PROHIBITED.

MODULAR WETLANDS
www.ModularWetlands.com | (855) 5MOD-WET

MWS-L-4-17-V
STORMWATER BIOFILTRATION SYSTEM STANDARD DETAIL

SITE SPECIFIC DATA			
PROJECT NAME		20-750 Meridian Upper Plateau	
PROJECT LOCATION		Riverside, CA	
STRUCTURE ID		16-3D	
TREATMENT REQUIRED			
VOLUME BASED (CF)		FLOW BASED (CFS)	
7,806			
TREATMENT HGL AVAILABLE (FT)			
PEAK BYPASS REQUIRED (CFS) – IF APPLICABLE			
PIPE DATA	I.E.	MATERIAL	DIAMETER
INLET PIPE 1			
INLET PIPE 2			
OUTLET PIPE			
	PRETREATMENT	BIOFILTRATION	DISCHARGE
RIM ELEVATION			
SURFACE LOAD	PARKWAY	OPEN PLANTER	PARKWAY
FRAME & COVER	ø30"	N/A	ø24"
WETLANDMEDIA VOLUME (CY)			5.41
WETLANDMEDIA DELIVERY METHOD			TBD
ORIFICE SIZE (DIA. INCHES)			ø2.05"
MAXIMUM PICK WEIGHT (LBS)			36000
NOTES:			

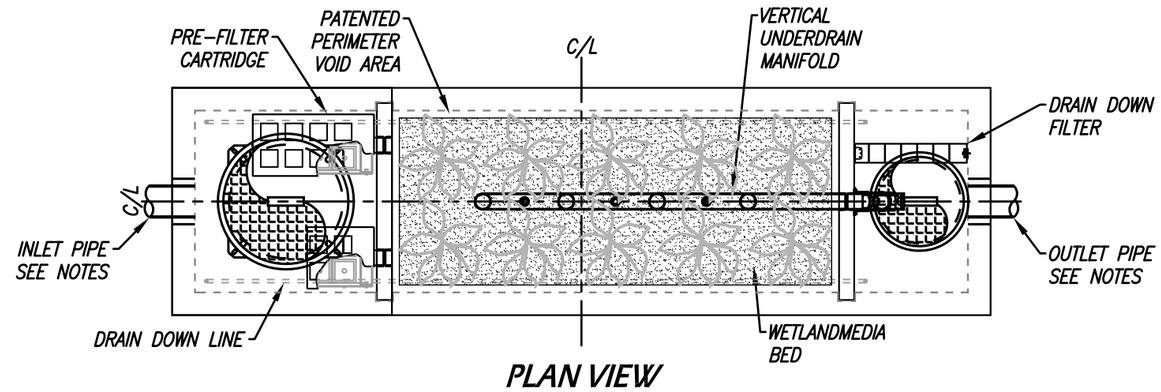

PLAN VIEW

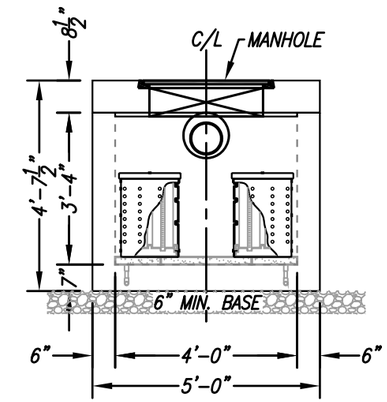

LEFT END VIEW

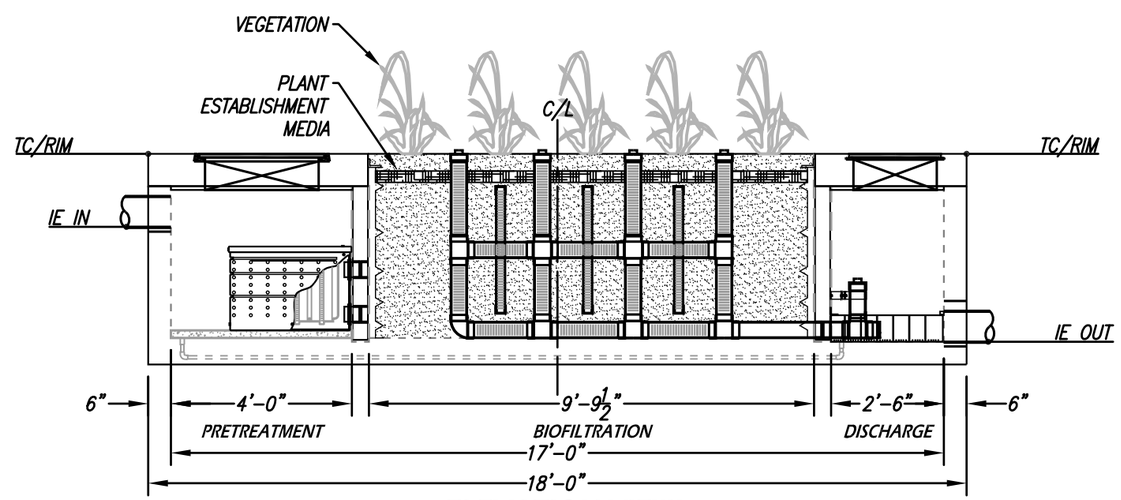

ELEVATION VIEW

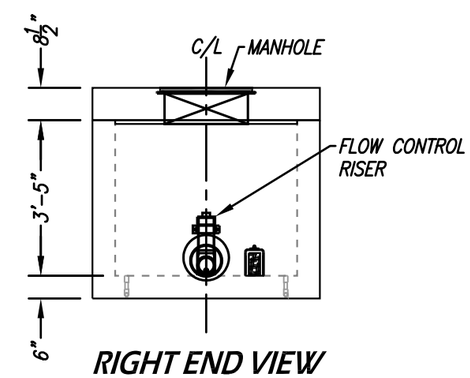

RIGHT END VIEW

INSTALLATION NOTES

1. CONTRACTOR TO PROVIDE ALL LABOR, EQUIPMENT, MATERIALS AND INCIDENTALS REQUIRED TO OFFLOAD AND INSTALL THE SYSTEM AND APPURTENANCES IN ACCORDANCE WITH THIS DRAWING AND THE MANUFACTURERS SPECIFICATIONS, UNLESS OTHERWISE STATED IN MANUFACTURERS CONTRACT.
2. UNIT MUST BE INSTALLED ON LEVEL BASE. MANUFACTURER RECOMMENDS A MINIMUM 6" LEVEL ROCK BASE UNLESS SPECIFIED BY THE PROJECT ENGINEER. CONTRACTOR IS RESPONSIBLE TO VERIFY PROJECT ENGINEERS RECOMMENDED BASE SPECIFICATIONS.
3. ALL PIPES MUST BE FLUSH WITH INSIDE SURFACE OF CONCRETE. (PIPES CANNOT INTRUDE BEYOND FLUSH). INVERT OF OUTFLOW PIPE MUST BE FLUSH WITH DISCHARGE CHAMBER FLOOR. ALL GAPS AROUND PIPES SHALL BE SEALED WATER TIGHT WITH A NON-SHRINK GROUT PER MANUFACTURERS STANDARD CONNECTION DETAIL AND SHALL MEET OR EXCEED REGIONAL PIPE CONNECTION STANDARDS.
4. CONTRACTOR TO SUPPLY AND INSTALL ALL EXTERNAL CONNECTING PIPES.
5. CONTRACTOR RESPONSIBLE FOR INSTALLATION OF ALL RISERS, MANHOLES, AND HATCHES. CONTRACTOR TO GROUT ALL MANHOLES AND HATCHES TO MATCH FINISHED SURFACE UNLESS SPECIFIED OTHERWISE.
6. DRIP OR SPRAY IRRIGATION REQUIRED ON ALL UNITS WITH VEGETATION.

GENERAL NOTES

1. MANUFACTURER TO PROVIDE ALL MATERIALS UNLESS OTHERWISE NOTED.
2. ALL DIMENSIONS, ELEVATIONS, SPECIFICATIONS AND CAPACITIES ARE SUBJECT TO CHANGE. FOR PROJECT SPECIFIC DRAWINGS DETAILING EXACT DIMENSIONS, WEIGHTS AND ACCESSORIES PLEASE CONTACT MANUFACTURER.

TREATMENT FLOW (CFS)	0.206
OPERATING HEAD (FT)	3.4
PRETREATMENT LOADING RATE (GPM/SF)	TBD
WETLAND MEDIA LOADING RATE (GPM/SF)	1.0

THE PRODUCT DESCRIBED MAY BE PROTECTED BY ONE OR MORE OF THE FOLLOWING US PATENTS: 7,425,262; 7,470,362; 7,674,378; 8,303,816; RELATED FOREIGN PATENTS OR OTHER PATENTS PENDING

PROPRIETARY AND CONFIDENTIAL:

THE INFORMATION CONTAINED IN THIS DRAWING IS THE SOLE PROPERTY OF MODULAR WETLANDS SYSTEMS. ANY REPRODUCTION IN PART OR AS A WHOLE WITHOUT THE WRITTEN PERMISSION OF MODULAR WETLANDS SYSTEMS IS PROHIBITED.

MODULAR WETLANDS
www.ModularWetlands.com | (855) 5MOD-WET

MWS-L-4-17-V
STORMWATER BIOFILTRATION SYSTEM STANDARD DETAIL

Flow Based Sizing

The MWS Linear can be used in stand alone applications to meet treatment flow requirements. Since the MWS Linear is the only biofiltration system that can accept inflow pipes several feet below the surface it can be used not only in decentralized design applications but also as a large central end-of-the-line application for maximum feasibility.

Treatment Flow Sizing Table

Model #	Dimensions	WetlandMedia Surface Area	Treatment Flow Rate (cfs)
MWS-L-4-4	4' x 4'	23 ft^2	0.052
MWS-L-4-6	4' x 6'	32 ft^2	0.073
MWS-L-4-8	4' x 8'	50 ft^2	0.115
MWS-L-4-13	4' x 13'	63 ft^2	0.144
MWS-L-4-15	4' x 15'	76 ft^2	0.175
MWS-L-4-17	4' x 17'	90 ft^2	0.206
MWS-L-4-19	4' x 19'	103 ft^2	0.237
MWS-L-4-21	4' x 21'	117 ft^2	0.268
MWS-L-8-8	8' x 8'	100 ft^2	0.230
MWS-L-8-12	8' x 12'	151 ft^2	0.346
MWS-L-8-16	8' x 16'	201 ft^2	0.462

Volume Based Sizing

Many states require treatment of a water quality volume and do not offer the option of flow based design. The MWS Linear and its unique horizontal flow makes it the only biofilter that can be used in volume based design installed downstream of ponds, detention basins, and underground storage systems.

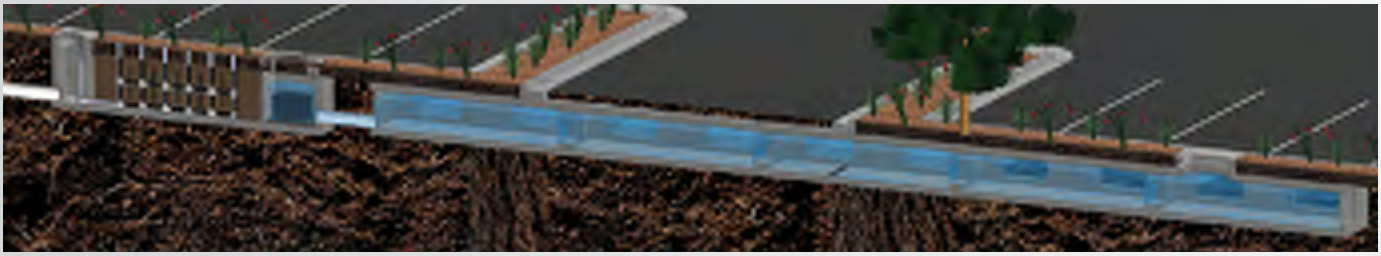

Treatment Volume Sizing Table

Model #	Treatment Capacity (cu. ft.) @ 24-Hour Drain Down	Treatment Capacity (cu. ft.) @ 48-Hour Drain Down
MWS-L-4-4	1140	2280
MWS-L-4-6	1600	3200
MWS-L-4-8	2518	5036
MWS-L-4-13	3131	6261
MWS-L-4-15	3811	7623
MWS-L-4-17	4492	8984
MWS-L-4-19	5172	10345
MWS-L-4-21	5853	11706
MWS-L-8-8	5036	10072
MWS-L-8-12	7554	15109
MWS-L-8-16	10073	20145

MWS Linear | *Sizing Options*

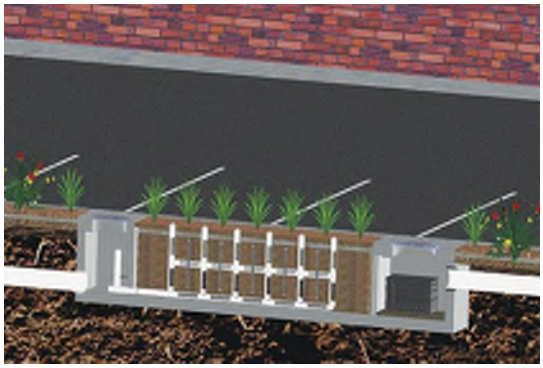

Flow Based Sizing

The MWS Linear can be used in stand alone applications to meet treatment flow requirements. Since the MWS Linear is the only biofiltration system that can accept inflow pipes several feet below the surface it can be used not only in decentralized design applications but also as a large central end-of-the-line application for maximum feasibility.

Model #	Dimensions	WetlandMEDIA Surface Area	Treatment Flow Rate (cfs)
MWS-L-4-4	4′ x 4′	23 sq. ft.	0.052
MWS-L-4-6	4′ x 6′	32 sq. ft.	0.073
MWS-L-4-8	4′ x 8′	50 sq. ft.	0.115
MWS-L-4-13	4′ x 13′	63 sq. ft.	0.144
MWS-L-4-15	4′ x 15′	76 sq. ft.	0.175
MWS-L-4-17	4′ x 17′	90 sq. ft.	0.206
MWS-L-4-19	4′ x 19′	103 sq. ft.	0.237
MWS-L-4-21	4′ x 21′	117 sq. ft.	0.268
MWS-L-6-8	7′ x 9′	64 sq. ft.	0.147
MWS-L-8-8	8′ x 8′	100 sq. ft.	0.230
MWS-L-8-12	8′ x 12′	151 sq. ft.	0.346
MWS-L-8-16	8′ x 16′	201 sq. ft.	0.462
MWS-L-8-20	9′ x 21′	252 sq. ft.	0.577
MWS-L-8-24	9′ x 25′	302 sq. ft.	0.693

Volume Based Sizing

Many states require treatment of a water quality volume and do not offer the option of flow based design. The MWS Linear and its unique horizontal flow makes it the only biofilter that can be used in volume based design installed downstream of ponds, detention basins, and underground storage systems.

Model #	Treatment Capacity (cu. ft.) @ 24-Hour Drain Down	Treatment Capacity (cu. ft.) @ 48-Hour Drain Down
MWS-L-4-4	1140	2280
MWS-L-4-6	1600	3200
MWS-L-4-8	2518	5036
MWS-L-4-13	3131	6261
MWS-L-4-15	3811	7623
MWS-L-4-17	4492	8984
MWS-L-4-19	5172	10345
MWS-L-4-21	5853	11706
MWS-L-6-8	3191	6382
MWS-L-8-8	5036	10072
MWS-L-8-12	7554	15109
MWS-L-8-16	10073	20145
MWS-L-8-20	12560	25120
MWS-L-8-24	15108	30216

Appendix 7: Hydromodification

Supporting Detail Relating to Hydrologic Conditions of Concern

HCOC Applicability Map

Hydromodification Susceptibility Documentation Report and Mapping
Riverside County Flood Control and Water Conservation District

Map 2

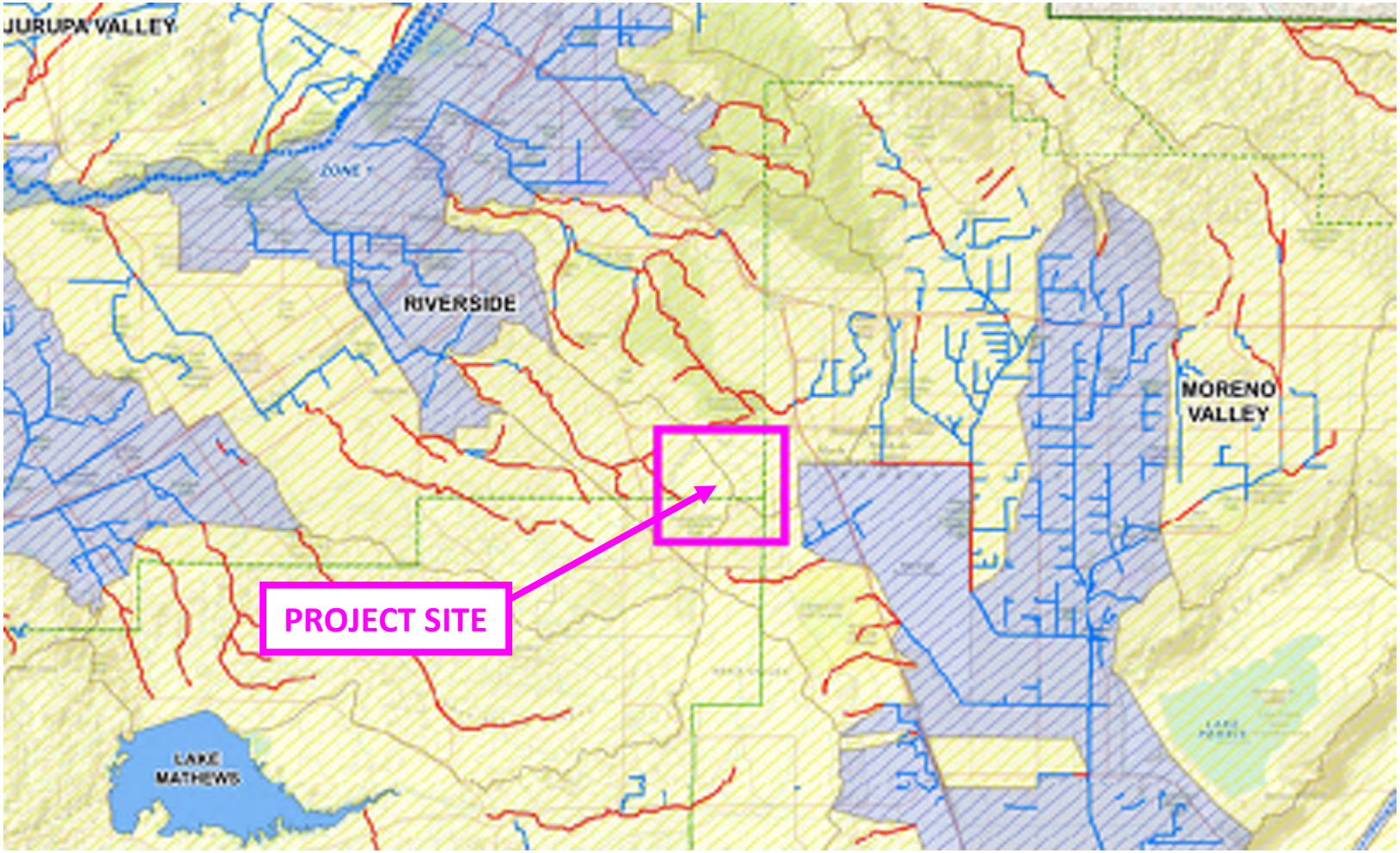

Legend

Stream Type

- Not Susceptible Stream Channels
- Potentially Susceptible Stream Channels
- Large River (Not Susceptible)
- Santa Ana River
- Adequate Sump

Watershed Areas

- Not Applicable Area
- Applicable Area
- Applicable Area Watershed Boundaries

- Flood Control and Water Conservation District Boundary
- Study Area
- County Boundary

Detention Tank and Treatment Volume Calculations

Street Name	DMA	DMA Area (acres)	Estimated Required Volume (6,000 cu-ft/acre of Impervious Area)	Detention Pipe Diameter (inches)	Detention Volume per Linear Foot (cu-ft/ft)	Required Pipe Length (ft) (48" dia. pipe)	Provided # of 50 LF Pipe	Storage Provided (cu-ft)	MWS Unit Model No.	MWS Unit 48-hour Treatment Capacity (cu-ft)
Linebacker	2-1D	0.859	5,156	48	12.57	411	9	5,655	MWS-L-4-13	6,261
Linebacker	2-2D	0.979	5,872	48	12.57	468	10	6,283	MWS-L-4-17	8,984
Bunker Hill	2-3D	1.693	10,157	48	12.57	809	17	10,681	MWS-L-4-21	11,706
Bunker Hill	2-4D	1.759	10,556	48	12.57	841	17	10,681	MWS-L-4-21	11,706
Airman	2-5D	0.932	5,593	48	12.57	446	9	5,655	MWS-L-4-15	7,623
Airman	2-6D	1.046	6,274	48	12.57	500	10	6,283	MWS-L-4-17	8,984
Cactus	2-7D	0.739	4,435	48	12.57	353	8	5,027	MWS-L-4-13	6,261
Cactus	2-8D	0.739	4,437	48	12.57	354	8	5,027	MWS-L-4-13	6,261
Cactus	2-9D	0.925	5,550	48	12.57	442	9	5,655	MWS-L-4-15	7,623
Cactus	2-10D	0.925	5,548	48	12.57	442	9	5,655	MWS-L-4-15	7,623
Cactus	2-11D	0.261	1,566	48	12.57	125	3	1,885	MWS-L-4-6	3,200
Barton	2-12D	1.087	6,521	48	12.57	519	11	6,912	MWS-L-4-17	8,984
Barton	2-13D	1.046	6,274	48	12.57	500	10	6,283	MWS-L-4-17	8,984
Arclight	3-1.1D	0.603	3,621	48	12.57	289	6	3,770	MWS-L-4-13	6,261
Airman	3-1.2D	1.129	6,775	48	12.57	540	11	6,912	MWS-L-4-17	8,984
Airman	3-2D	1.570	9,422	48	12.57	750	15	9,425	MWS-L-4-21	11,706
Arclight	5-1D	1.006	6,035	48	12.57	481	10	6,283	MWS-L-4-15	7,623
Arclight	5-2D	1.006	6,035	48	12.57	481	10	6,283	MWS-L-4-15	7,623
Linebacker	7-1D	1.349	8,097	48	12.57	645	13	8,168	MWS-L-4-19	10,345
Linebacker	7-2D	1.150	6,899	48	12.57	550	11	6,912	MWS-L-4-17	8,984
Cactus	9-1D	1.139	6,837	48	12.57	545	11	6,912	MWS-L-4-17	8,984
Cactus	9-2D	1.187	7,122	48	12.57	567	12	7,540	MWS-L-4-17	8,984
Cactus	9-3D	1.488	8,927	48	12.57	711	15	9,425	MWS-L-4-19	10,345
Cactus	9-4D	1.503	9,018	48	12.57	718	15	9,425	MWS-L-4-21	11,706
Cactus	9-5D	1.233	7,397	48	12.57	589	12	7,540	MWS-L-4-17	8,984
Cactus	9-6D	1.271	7,626	48	12.57	607	13	8,168	MWS-L-4-17	8,984
Brown	9-7D	0.556	3,338	48	12.57	266	6	3,770	MWS-L-4-13	5,036
Brown	9-8D	0.434	2,606	48	12.57	208	5	3,142	MWS-L-4-8	5,036
Brown	9-9D	0.268	1,610	48	12.57	129	3	1,885	MWS-L-4-4	2,280
Brown	9-10D	0.269	1,612	48	12.57	129	3	1,885	MWS-L-4-4	2,280
Barton	16-1D	0.689	4,137	48	12.57	330	7	4,398	MWS-L-4-13	6,261
Barton	16-2D	1.326	7,957	48	12.57	634	13	8,168	MWS-L-4-17	8,984
Barton	16-3D	1.301	7,806	48	12.57	622	13	8,168	MWS-L-4-17	8,984

Appendix 8: Source Control

Pollutant Sources/Source Control Checklist

STORMWATER POLLUTANT SOURCES/SOURCE CONTROL CHECKLIST

How to use this worksheet (also see instructions in Section G of the WQMP Template):

1. Review Column 1 and identify which of these potential sources of stormwater pollutants apply to your site. Check each box that applies.
2. Review Column 2 and incorporate all of the corresponding applicable BMPs in your WQMP Exhibit.
3. Review Columns 3 and 4 and incorporate all of the corresponding applicable permanent controls and operational BMPs in your WQMP. Use the format shown in Table G.1on page 23 of this WQMP Template. Describe your specific BMPs in an accompanying narrative, and explain any special conditions or situations that required omitting BMPs or substituting alternative BMPs for those shown here.

IF THESE SOURCES WILL BE ON THE PROJECT SITE ...	... THEN YOUR WQMP SHOULD INCLUDE THESE SOURCE CONTROL BMPs, AS APPLICABLE		
1 Potential Sources of Runoff Pollutants	2 Permanent Controls—Show on WQMP Drawings	3 Permanent Controls—List in WQMP Table and Narrative	4 Operational BMPs—Include in WQMP Table and Narrative
☒ A. **On-site storm drain inlets**	☒ **Locations of inlets.**	☒ **Mark all inlets with the words "Only Rain Down the Storm Drain" or similar. Catch Basin Markers may be available from the Riverside County Flood Control and Water Conservation District, call 951.955.1200 to verify.**	☒ **Maintain and periodically repaint or replace inlet markings.** ☒ **Provide stormwater pollution prevention information to new site owners, lessees, or operators.** ☒ **See applicable operational BMPs in Fact Sheet SC-44, "Drainage System Maintenance," in the CASQA Stormwater Quality Handbooks at www.cabmphandbooks.com** ☒ **Include the following in lease agreements: "Tenant shall not allow anyone to discharge anything to storm drains or to store or deposit materials so as to create a potential discharge to storm drains."**
☐ B. **Interior floor drains and elevator shaft sump pumps**		☐ **State that interior floor drains and elevator shaft sump pumps will be plumbed to sanitary sewer.**	☐ **Inspect and maintain drains to prevent blockages and overflow.**
☐ C. **Interior parking garages**		☐ **State that parking garage floor drains will be plumbed to the sanitary sewer.**	☐ **Inspect and maintain drains to prevent blockages and overflow.**

IF THESE SOURCES WILL BE ON THE PROJECT SITE ...	... THEN YOUR WQMP SHOULD INCLUDE THESE SOURCE CONTROL BMPs, AS APPLICABLE		
1 Potential Sources of Runoff Pollutants	2 Permanent Controls—Show on WQMP Drawings	3 Permanent Controls—List in WQMP Table and Narrative	4 Operational BMPs—Include in WQMP Table and Narrative
☐ D1. **Need for future indoor & structural pest control**		☐ **Note building design features that discourage entry of pests.**	☐ **Provide Integrated Pest Management information to owners, lessees, and operators.**
☒ D2. **Landscape/ Outdoor Pesticide Use**	☐ **Show locations of native trees or areas of shrubs and ground cover to be undisturbed and retained.** ☐ **Show self-retaining landscape areas, if any.** ☒ **Show stormwater treatment and hydrograph modification management BMPs. (See instructions in Chapter 3, Step 5 and guidance in Chapter 5.)**	**State that final landscape plans will accomplish all of the following.** ☐ **Preserve existing native trees, shrubs, and ground cover to the maximum extent possible.** ☒ **Design landscaping to minimize irrigation and runoff, to promote surface infiltration where appropriate, and to minimize the use of fertilizers and pesticides that can contribute to stormwater pollution.** ☒ **Where landscaped areas are used to retain or detain stormwater, specify plants that are tolerant of saturated soil conditions.** ☐ **Consider using pest-resistant plants, especially adjacent to hardscape.** ☒ **To insure successful establishment, select plants appropriate to site soils, slopes, climate, sun, wind, rain, land use, air movement, ecological consistency, and plant interactions.**	☒ **Maintain landscaping using minimum or no pesticides.** ☒ **See applicable operational BMPs in "What you should know for…..Landscape and Gardening"** at http://rcflood.org/stormwater/**Error! Hyperlink reference not valid.** ☒ **Provide IPM information to new owners, lessees and operators.**

IF THESE SOURCES WILL BE ON THE PROJECT SITE …	… THEN YOUR WQMP SHOULD INCLUDE THESE SOURCE CONTROL BMPs, AS APPLICABLE		
1 Potential Sources of Runoff Pollutants	2 Permanent Controls—Show on WQMP Drawings	3 Permanent Controls—List in WQMP Table and Narrative	4 Operational BMPs—Include in WQMP Table and Narrative
❑ E. **Pools, spas, ponds, decorative fountains, and other water features.**	❑ **Show location of water feature and a sanitary sewer cleanout in an accessible area within 10 feet. (Exception: Public pools must be plumbed according to County Department of Environmental Health Guidelines.)**	**If the Co-Permittee requires pools to be plumbed to the sanitary sewer, place a note on the plans and state in the narrative that this connection will be made according to local requirements.**	❑ **See applicable operational BMPs in** "Guidelines for Maintaining Your Swimming Pool, Jacuzzi and Garden Fountain" at http://rcflood.org/stormwater/
❑ F. **Food service**	❑ **For restaurants, grocery stores, and other food service operations, show location (indoors or in a covered area outdoors) of a floor sink or other area for cleaning floor mats, containers, and equipment.** ❑ **On the drawing, show a note that this drain will be connected to a grease interceptor before discharging to the sanitary sewer.**	❑ **Describe the location and features of the designated cleaning area.** ❑ **Describe the items to be cleaned in this facility and how it has been sized to insure that the largest items can be accommodated.**	❑ **See the brochure, "**The Food Service Industry Best Management Practices for: Restaurants, Grocery Stores, Delicatessens and Bakeries" at http://rcflood.org/stormwater/ **Provide this brochure to new site owners, lessees, and operators.**
❑ G. **Refuse areas**	❑ **Show where site refuse and recycled materials will be handled and stored for pickup. See local municipal requirements for sizes and other details of refuse areas.** ❑ **If dumpsters or other receptacles are outdoors, show how the designated area will be covered, graded, and paved to prevent run-on and show locations of berms to prevent runoff from the area.** ❑ **Any drains from dumpsters, compactors, and tallow bin areas shall be connected to a grease removal device before discharge to sanitary sewer.**	❑ **State how site refuse will be handled and provide supporting detail to what is shown on plans.** ❑ **State that signs will be posted on or near dumpsters with the words "Do not dump hazardous materials here" or similar.**	❑ **State how the following will be implemented:** **Provide adequate number of receptacles. Inspect receptacles regularly; repair or replace leaky receptacles. Keep receptacles covered. Prohibit/prevent dumping of liquid or hazardous wastes. Post "no hazardous materials" signs. Inspect and pick up litter daily and clean up spills immediately. Keep spill control materials available on-site. See Fact Sheet SC-34, "Waste Handling and Disposal" in the CASQA Stormwater Quality Handbooks at** www.cabmphandbooks.com

IF THESE SOURCES WILL BE ON THE PROJECT SITE ...	... THEN YOUR WQMP SHOULD INCLUDE THESE SOURCE CONTROL BMPs, AS APPLICABLE		
1 Potential Sources of Runoff Pollutants	2 Permanent Controls—Show on WQMP Drawings	3 Permanent Controls—List in WQMP Table and Narrative	4 Operational BMPs—Include in WQMP Table and Narrative
❑ H. **Industrial processes.**	❑ **Show process area.**	❑ **If industrial processes are to be located on site, state: "All process activities to be performed indoors. No processes to drain to exterior or to storm drain system."**	❑ **See Fact Sheet SC-10, "Non-Stormwater Discharges" in the CASQA Stormwater Quality Handbooks at www.cabmphandbooks.com** See the brochure "Industrial & Commercial Facilities Best Management Practices for: Industrial, Commercial Facilities" at http://rcflood.org/stormwater/

IF THESE SOURCES WILL BE ON THE PROJECT SITE …	… THEN YOUR WQMP SHOULD INCLUDE THESE SOURCE CONTROL BMPs, AS APPLICABLE		
1 Potential Sources of Runoff Pollutants	2 Permanent Controls—Show on WQMP Drawings	3 Permanent Controls—List in WQMP Table and Narrative	4 Operational BMPs—Include in WQMP Table and Narrative
❑ I. **Outdoor storage of equipment or materials. (See rows J and K for source control measures for vehicle cleaning, repair, and maintenance.)**	❑ **Show any outdoor storage areas, including how materials will be covered. Show how areas will be graded and bermed to prevent run-on or run-off from area.** ❑ **Storage of non-hazardous liquids shall be covered by a roof and/or drain to the sanitary sewer system, and be contained by berms, dikes, liners, or vaults.** ❑ **Storage of hazardous materials and wastes must be in compliance with the local hazardous materials ordinance and a Hazardous Materials Management Plan for the site.**	**Include a detailed description of materials to be stored, storage areas, and structural features to prevent pollutants from entering storm drains.** **Where appropriate, reference documentation of compliance with the requirements of Hazardous Materials Programs for:** ▪ **Hazardous Waste Generation** ▪ **Hazardous Materials Release Response and Inventory** ▪ **California Accidental Release (CalARP)** ▪ **Aboveground Storage Tank** ▪ **Uniform Fire Code Article 80 Section 103(b) & (c) 1991** ▪ **Underground Storage Tank** **www.cchealth.org/groups/hazmat/**	❑ **See the Fact Sheets SC-31, "Outdoor Liquid Container Storage" and SC-33, "Outdoor Storage of Raw Materials " in the CASQA Stormwater Quality Handbooks at www.cabmphandbooks.com**

IF THESE SOURCES WILL BE ON THE PROJECT SITE ...	... THEN YOUR WQMP SHOULD INCLUDE THESE SOURCE CONTROL BMPs, AS APPLICABLE		
1 Potential Sources of Runoff Pollutants	2 Permanent Controls—Show on WQMP Drawings	3 Permanent Controls—List in WQMP Table and Narrative	4 Operational BMPs—Include in WQMP Table and Narrative
❑ J. **Vehicle and Equipment Cleaning**	❑ **Show on drawings as appropriate:** **(1) Commercial/industrial facilities having vehicle/equipment cleaning needs shall either provide a covered, bermed area for washing activities or discourage vehicle/equipment washing by removing hose bibs and installing signs prohibiting such uses.** **(2) Multi-dwelling complexes shall have a paved, bermed, and covered car wash area (unless car washing is prohibited on-site and hoses are provided with an automatic shut-off to discourage such use).** **(3) Washing areas for cars, vehicles, and equipment shall be paved, designed to prevent run-on to or runoff from the area, and plumbed to drain to the sanitary sewer.** **(4) Commercial car wash facilities shall be designed such that no runoff from the facility is discharged to the storm drain system. Wastewater from the facility shall discharge to the sanitary sewer, or a wastewater reclamation system shall be installed.**	❑ **If a car wash area is not provided, describe any measures taken to discourage on-site car washing and explain how these will be enforced.**	**Describe operational measures to implement the following (if applicable):** ❑ **Washwater from vehicle and equipment washing operations shall not be discharged to the storm drain system.** Refer to "Outdoor Cleaning Activities and Professional Mobile Service Providers" for many of the Potential Sources of Runoff Pollutants categories below. Brochure can be found at http://rcflood.org/stormwater/ ❑ **Car dealerships and similar may rinse cars with water only.**

IF THESE SOURCES WILL BE ON THE PROJECT SITE …	… THEN YOUR WQMP SHOULD INCLUDE THESE SOURCE CONTROL BMPs, AS APPLICABLE		
1 Potential Sources of Runoff Pollutants	2 Permanent Controls—Show on WQMP Drawings	3 Permanent Controls—List in WQMP Table and Narrative	4 Operational BMPs—Include in WQMP Table and Narrative
❑ K. **Vehicle/Equipment Repair and Maintenance**	❑ **Accommodate all vehicle equipment repair and maintenance indoors. Or designate an outdoor work area and design the area to prevent run-on and runoff of stormwater.** ❑ **Show secondary containment for exterior work areas where motor oil, brake fluid, gasoline, diesel fuel, radiator fluid, acid-containing batteries or other hazardous materials or hazardous wastes are used or stored. Drains shall not be installed within the secondary containment areas.** ❑ **Add a note on the plans that states either (1) there are no floor drains, or (2) floor drains are connected to wastewater pretreatment systems prior to discharge to the sanitary sewer and an industrial waste discharge permit will be obtained.**	❑ **State that no vehicle repair or maintenance will be done outdoors, or else describe the required features of the outdoor work area.** ❑ **State that there are no floor drains or if there are floor drains, note the agency from which an industrial waste discharge permit will be obtained and that the design meets that agency's requirements.** ❑ **State that there are no tanks, containers or sinks to be used for parts cleaning or rinsing or, if there are, note the agency from which an industrial waste discharge permit will be obtained and that the design meets that agency's requirements.**	**In the Stormwater Control Plan, note that all of the following restrictions apply to use the site:** ❑ **No person shall dispose of, nor permit the disposal, directly or indirectly of vehicle fluids, hazardous materials, or rinsewater from parts cleaning into storm drains.** ❑ **No vehicle fluid removal shall be performed outside a building, nor on asphalt or ground surfaces, whether inside or outside a building, except in such a manner as to ensure that any spilled fluid will be in an area of secondary containment. Leaking vehicle fluids shall be contained or drained from the vehicle immediately.** ❑ **No person shall leave unattended drip parts or other open containers containing vehicle fluid, unless such containers are in use or in an area of secondary containment.** Refer to "Automotive Maintenance & Car Care Best Management Practices for Auto Body Shops, Auto Repair Shops, Car Dealerships, Gas Stations and Fleet Service Operations". Brochure can be found at http://rcflood.org/stormwater/ Refer to Outdoor Cleaning Activities and Professional Mobile Service Providers for many of the Potential Sources of Runoff Pollutants categories below. Brochure can be found at http://rcflood.org/stormwater/

IF THESE SOURCES WILL BE ON THE PROJECT SITE …	… THEN YOUR WQMP SHOULD INCLUDE THESE SOURCE CONTROL BMPs, AS APPLICABLE		
1 Potential Sources of Runoff Pollutants	2 Permanent Controls—Show on WQMP Drawings	3 Permanent Controls—List in WQMP Table and Narrative	4 Operational BMPs—Include in WQMP Table and Narrative
❑ L. **Fuel Dispensing Areas**	❑ **Fueling areas[6] shall have impermeable floors (i.e., portland cement concrete or equivalent smooth impervious surface) that are: a) graded at the minimum slope necessary to prevent ponding; and b) separated from the rest of the site by a grade break that prevents run-on of stormwater to the maximum extent practicable.** ❑ **Fueling areas shall be covered by a canopy that extends a minimum of ten feet in each direction from each pump. [Alternative: The fueling area must be covered and the cover's minimum dimensions must be equal to or greater than the area within the grade break or fuel dispensing area[1].] The canopy [or cover] shall not drain onto the fueling area.**		❑ **The property owner shall dry sweep the fueling area routinely.** ❑ **See the Fact Sheet SD-30 , "Fueling Areas" in the CASQA Stormwater Quality Handbooks at www.cabmphandbooks.com**

[6] **The fueling area shall be defined as the area extending a minimum of 6.5 feet from the corner of each fuel dispenser or the length at which the hose and nozzle assembly may be operated plus a minimum of one foot, whichever is greater.**

IF THESE SOURCES WILL BE ON THE PROJECT SITE ...	... THEN YOUR WQMP SHOULD INCLUDE THESE SOURCE CONTROL BMPs, AS APPLICABLE		
1 Potential Sources of Runoff Pollutants	2 Permanent Controls—Show on WQMP Drawings	3 Permanent Controls—List in WQMP Table and Narrative	4 Operational BMPs—Include in WQMP Table and Narrative
❑ M. **Loading Docks**	❑ **Show a preliminary design for the loading dock area, including roofing and drainage. Loading docks shall be covered and/or graded to minimize run-on to and runoff from the loading area. Roof downspouts shall be positioned to direct stormwater away from the loading area. Water from loading dock areas shall be drained to the sanitary sewer, or diverted and collected for ultimate discharge to the sanitary sewer.** ❑ **Loading dock areas draining directly to the sanitary sewer shall be equipped with a spill control valve or equivalent device, which shall be kept closed during periods of operation.** ❑ **Provide a roof overhang over the loading area or install door skirts (cowling) at each bay that enclose the end of the trailer.**		❑ **Move loaded and unloaded items indoors as soon as possible.** ❑ **See Fact Sheet SC-30, "Outdoor Loading and Unloading," in the CASQA Stormwater Quality Handbooks at www.cabmphandbooks.com**

IF THESE SOURCES WILL BE ON THE PROJECT SITE …	… THEN YOUR WQMP SHOULD INCLUDE THESE SOURCE CONTROL BMPs, AS APPLICABLE		
1 Potential Sources of Runoff Pollutants	2 Permanent Controls—Show on WQMP Drawings	3 Permanent Controls—List in WQMP Table and Narrative	4 Operational BMPs—Include in WQMP Table and Narrative
❑ N. **Fire Sprinkler Test Water**		❑ **Provide a means to drain fire sprinkler test water to the sanitary sewer.**	❑ **See the note in Fact Sheet SC-41, "Building and Grounds Maintenance," in the CASQA Stormwater Quality Handbooks at www.cabmphandbooks.com**
O. **Miscellaneous Drain or Wash Water or Other Sources** ❑ **Boiler drain lines** ❑ **Condensate drain lines** ❑ **Rooftop equipment** ❑ **Drainage sumps** ❑ **Roofing, gutters, and trim.** ❑ **Other sources**		❑ **Boiler drain lines shall be directly or indirectly connected to the sanitary sewer system and may not discharge to the storm drain system.** ❑ **Condensate drain lines may discharge to landscaped areas if the flow is small enough that runoff will not occur. Condensate drain lines may not discharge to the storm drain system.** ❑ **Rooftop equipment with potential to produce pollutants shall be roofed and/or have secondary containment.** ❑ **Any drainage sumps on-site shall feature a sediment sump to reduce the quantity of sediment in pumped water.** ❑ **Avoid roofing, gutters, and trim made of copper or other unprotected metals that may leach into runoff.** **Include controls for other sources as specified by local reviewer.**	

IF THESE SOURCES WILL BE ON THE PROJECT SITE ...	... THEN YOUR WQMP SHOULD INCLUDE THESE SOURCE CONTROL BMPs, AS APPLICABLE		
1 Potential Sources of Runoff Pollutants	2 Permanent Controls—Show on WQMP Drawings	3 Permanent Controls—List in WQMP Table and Narrative	4 Operational BMPs—Include in WQMP Table and Narrative
☒ P. **Plazas, sidewalks, and parking lots.**			☒ **Sweep plazas, sidewalks, and parking lots regularly to prevent accumulation of litter and debris. Collect debris from pressure washing to prevent entry into the storm drain system. Collect washwater containing any cleaning agent or degreaser and discharge to the sanitary sewer not to a storm drain.**

Appendix 9: O&M

Operation and Maintenance Plan and Documentation of Finance, Maintenance and Recording Mechanisms

Operation and Maintenance Plan

MJPA Landscaping, Lighting and Maintenance District (LLMD) will be responsible for all operations and maintenance related to the public streets. This includes storm drain, parkway drains, landscaping, detention tanks, and biotreatment units collecting stormwater from Barton Drive, Arclight Drive, Cactus Avenue, Bunker Hill Drive, Airman Drive, Linebacker Drive and Brown Avenue that are a part of the limit of work. Onsite operations and maintenance responsibilities will be presented in the addendum WQMP's as each parcel is developed.

BMP Type	Inspection/Maintenance Required	Minimum Frequency of Activities
Irrigation	Inspect irrigation equipment. Check water sensors and adjust irrigation heads and timing.	Monthly or according to established maintenance schedule
Landscape Areas	Landscape maintenance will consist of trimming and replanting of vegetation, repair and maintenance of irrigation systems, and appropriate use of fertilizers and pesticides.	Monthly or according to established maintenance schedule
Proprietary Biotreatment (MWS Units)	Inspect for trash and debris in system inlet and outlet. Clean as necessary per manufacturer's recommendations. Inspect and record condition of plants. Replace media surface per manufacturer's recommendations. Cleanout unit per manufacturer's recommendations.	Prior to rainy season, immediately after rainy season, and after any storm events
Storm Drain (Detention Tanks)	Inspect for structural issues, leaks, or damage. Inspect for trash and clean as necessary with vacuum truck.	Quarterly and after storm events

Irrigation Systems: Water conservation is to be maintained at all times per the approved irrigation plans. Monitoring of the irrigation system should be provided at least twice monthly or as necessary to ensure that appropriate watering levels are maintained as well as to verify that no piping or irrigation heads are leaking. Any debris, sediment, mineral and grit deposits should be removed from the irrigation system at regular intervals to provide consistent watering.

Landscaped Areas: Open space areas, including unpaved yards, shall be kept free of trash and debris. All trimming, pruning, and removal of fallen organic material from plants, shrubs, and trees are to be collected per an established landscape maintenance plan and disposed in the appropriate location or transported to a green-waste collection facility. The planting materials are to remain as indicated on the approved set of landscape planting plans. Additional actions

should be taken to ensure that the surface flow paths, storm drain outlet and inlet in the area are cleared of debris or vegetation
obstructions.

Biotreatment: The biotreatment system shall be inspected for erosion, dead vegetation, soggy soils, or standing water. The use of fertilizers and pesticides on the plants inside the Facility should be minimized. Keep adjacent landscape areas maintained, remove clippings from landscape maintenance activities, remove trash and debris, replace damaged grass and/or plants, and replace surface mulch/cobble as needed to maintain a 2 to 3-inch soil cover. Facilities should be inspected for ponding after storm events. See manufacturer's recommendations.

Storm Drain System: Inlets, outlets, cleanouts, manholes, and pipelines are to be inspected quarterly and after each storm event or according to an existing maintenance program. All parts of the system are to be periodically cleaned to ensure that the system works properly during any storm event. All hardscape, landscape, parking, and driveway areas shall be kept clean, sanitary and free from any accumulation of debris, sediments and waste materials that could enter the storm drain system.

RECORDING REQUESTED BY: March Joint Powers Authority **WHEN RECORDED MAIL TO:** March Joint Powers Authority Planning Department 14205 Meridian Parkway, Suite 140 Riverside, CA 92518 **Water Quality Management Plan#**	

For Recorder's Office Use Only

WATER QUALITY MANAGEMENT PLAN AND URBAN RUNOFF BMP TRANSFER, ACCESS AND MAINTENANCE AGREEMENT

THIS AGREEMENT is made and entered into in _____, California, this _____day of _____2021, by and between _____, herein after referred to as "Owner" and March Joint Powers Authority, a joint powers authority, located in the County of Riverside, State of California hereinafter referred to as "MJPA". MJPA and Owner are sometimes individually referred to as "Party" and collectively as "Parties" in this Agreement

WHEREAS, the Owner owns real property ("Property") in the County of Riverside, State of California, more specifically described in Exhibit "A" and depicted in Exhibit "B," each of which exhibits is attached hereto and incorporated herein by this reference;

WHEREAS, the Property is located within the jurisdiction of the MJPA;

WHEREAS, at the time of initial approval of development project known as _____within the Property described here, the MJPA required the project to employ Best Management Practices, hereinafter referred to as "BMPs," to minimize pollutants in urban runoff;

WHEREAS, the Owner has chosen to install and/or implement BMPs as described in the Water Quality Management Plan, on file with the MJPA, hereinafter referred to as "WQMP", to minimize pollutants in urban runoff and to minimize other adverse impacts of urban runoff;

WHEREAS, said WQMP has been certified by the Owner and reviewed and approved by the MJPA;

WHEREAS, said BMPs, with installation and/or implementation on private property and draining only private property, are part of a private facility with all maintenance or replacement, therefore, the sole responsibility of the Owner in accordance with the terms of this Agreement;

WHEREAS, the Owner is aware that periodic and continuous maintenance, including, but not necessarily limited to, filter material replacement and sediment removal, is required to assure peak performance of all BMPs in the WQMP and that, furthermore, such maintenance activity will require compliance with all Local, State, or Federal laws and regulations, including those pertaining to confined space and waste disposal methods, in effect at the time such maintenance occurs;

NOW THEREFORE, it is mutually stipulated and agreed as follows:

1. Owner hereby provides the MJPA's designee complete access, of reasonable duration, to the BMPs and their immediate vicinity at any time, upon reasonable notice. In the event of an emergency, no advance notice shall be required, for the purpose of the MJPA's designee's inspection, sampling, testing of the device, and undertaking all necessary repairs or other preventative measures at Owner's expense as provided in paragraph 3 below. MJPA shall make every effort at all times to minimize or avoid interference with Owner's use of the Property.

2. Owner shall use its best efforts diligently to maintain all BMPs in a manner assuring peak performance at all times. All reasonable precautions shall be exercised by Owner and Owner's representative or contractor in the removal and extraction of any material(s) from the BMPs and the ultimate disposal of the material(s) in a manner consistent with all relevant laws and regulations in effect at the time. As may be requested from time to time by the MJPA, the Owner shall provide the MJPA with documentation identifying the material(s) removed, the quantity, and disposal destination.

3. In the event Owner, or its successors or assigns, fails to accomplish the necessary maintenance contemplated by this Agreement, within five (5) days of being given written notice by the MJPA, the MJPA is hereby authorized to cause any maintenance necessary to be done and charge the entire cost and expense to the Owner or Owner's successors or assigns, including administrative costs, attorneys fees and interest thereon at the maximum rate authorized by the Civil Code from the date of the notice of expense until paid in full. Nothing in this Section or this Agreement creates an obligation by the MJPA to maintain or repair any BMP, nor does this section prohibit the MJPA from pursuing other legal recourse against the Owner.

4. The MJPA may require the owner to post security in form and for a time period satisfactory to the MJPA to guarantee the performance of the obligations state herein. Should the Owner fail to perform the obligations under the Agreement, the MJPA may, in the case of a cash bond, act for the Owner using the proceeds from it, or in the case of a surety bond, require the sureties to perform the obligations of the Agreement. As an additional remedy, the MJPA may withdraw any previous

Urban Runoff-related approval with respect to the Property on which BMPs have been installed and/or implemented until such time as Owner repays to MJPA its reasonable costs incurred in accordance with paragraph 3 above.

5. This Agreement shall be recorded in the Office of the Recorder of Riverside County, California, at the expense of the Owner and shall constitute notice to all successors and assigns of the title to said Property of the obligation herein set forth, and also a lien in such amount as will fully reimburse the MJPA, including interest as herein above set forth, subject to foreclosure in event of default in payment.

6. In event of legal action occasioned by any default or action of the Owner, or its successors or assigns, then the Owner and its successors or assigns agree(s) to pay all costs incurred by the MJPA in enforcing the terms of this Agreement, including reasonable attorney's fees and costs, and that the same shall become a part of the lien against said Property.

7. It is the intent of the Parties hereto that burdens and benefits herein undertaken shall constitute covenants that run with said Property and constitute a lien there against.

8. The obligations herein undertaken shall be binding upon the heirs, successors, executors, administrators and assigns of the parties hereto. The term "Owner" shall include not only the present Owner, but also its heirs, successors, executors, administrators, and assigns. Owner shall notify any successor to title of all or part of the Property about the existence of this Agreement. Owner shall provide such notice prior to such successor obtaining an interest in all or part of the Property. Owner shall provide a copy of such notice to the MJPA at the same time such notice is provided to the successor.

9. Time is of the essence in the performance of this Agreement.

10. Any notice to a party required or called for in this Agreement shall be served in person, or by deposit in the U.S. Mail, first class postage prepaid, to the address set forth below. Notice(s) shall be deemed effective upon receipt, or seventy-two (72) hours after deposit in the U.S. Mail, whichever is earlier. A Party may change a notice address only by providing written notice thereof to the other Party.

11. The Owner its heirs, successors, executors, administrators and assigns agree to defend, indemnify, and hold harmless the MJPA, its officials, employees and its authorized agents from any and all damages, accidents, casualties, occurrences or claims which might arise or be asserted against the MJPA and which are in any way connected with the construction, operation, presence, existence, or maintenance of the BMP by the Owner, or from any personal injury or property damage that may result from the MJPA or other public entities entering the Property under Section 1 of this Agreement. The MJPA, may from time to time, specify amount of coverage and require proof of insurance to be provided to the MJPA.

IF TO MJPA:	**IF TO OWNER:**
March Joint Powers Authority	
Planning Department	
14205 Meridian Parkway, Suite 140	
Riverside, CA 92518	

SIGNATURES ON FOLLOWING PAGE

IN WITNESS THEREOF, the parties hereto have affixed their signatures as of the date first written above.

APPROVED AS TO FORM:

_____
Best Best and Krieger LLP, General Counsel for the March Joint Powers Authority

_____
Name

March Joint Powers Authority General Counsel
_____
Title

ATTEST:

_____
Agency Secretary Date

OWNER:

NOTARIES ON FOLLOWING PAGE

<u>Exhibit A</u>
Property Legal Description

<u>Exhibit B</u>
Map/Illustration

Appendix 10: Educational Materials

BMP Fact Sheets, Maintenance Guidelines and Other End-User BMP Information

EMPLOYEE TRAINING LOG

EMPLOYEE NAME	DATE TRAINED	COMMENTS

RIVERSIDE COUNTY
WATERSHED PROTECTION

Report Illegal Dumping:
1-800-506-2555
Submit Report

STORM WATER HOME
PUBLIC NOTICES
MUNICIPALITIES
Santa Ana Region
Santa Margarita Region
SMRWMA Clearinghouse
Whitewater Region
DEVELOPERS
MUNICIPAL TRAINING
Training Materials
Training Registration
Course Schedules
PUBLIC EDUCATION
MONITORING
STATE TRASH AMENDMENTS
INDUSTRIAL PERMITS
CONTACT US
LINKS
STORM WATER FACTS
BMP PERFORMANCE
STORMWATER AND WATER CONSERVATION TRACKING TOOL

General Permit for Stormwater Discharges Associated with Industrial Activities

The State adopted the latest version of the General Permit for Stormwater Discharges Associated with Industrial Activities (IGP) on April 1, 2014. The 2014 IGP regulates industrial facility operators that discharge stormwater. The IGP became effective on July 1, 2015. This fact sheet summarizes the main compliance requirements in the 2014 IGP. For all of the requirements, the California Industrial Program is available at: http://www.waterboards.ca.gov/water_issues/programs/stormwater/industrial.shtml

Industrial facilities covered by this permit:

Standard Industrial Classification (SIC) codes or narrative descriptions are used to identify regulated facilities. SIC codes describe the primary nature of the business in which a facility is engaged. Please visit the California Industrial Program link above for full descriptions of all coverage categories. Below is a generalized list of coverage categories:

- Manufacturing
- Refining
- Processing
- Mining
- Hazardous Waste Storage and Treatment
- Landfills
- Recycling Facilities
- Steam Electric Power Plants
- Transportation facilities
- Waste Water Treatment

If coverage is required, the facility operator and its duly authorized representative will need to prepare a Storm Water Pollution Prevention Plans (SWPPP) and register with the State Water Board through a website called SMARTS at https://smarts.waterboards.ca.gov/smarts/faces/SwSmartsLogin.xhtml

Storm Water Pollution Prevention Plans (SWPPPs)

Industrial facility operators are required to develop and implement a site-specific SWPPP that contain the following information:

- Facility Name and Contact Information
- Site Map
- List of Industrial Materials
- Description of Potential Pollution Sources
- Assessment of Potential Pollutant Sources
- Minimum Best Management Practices (BMPs) which includes a designated Pollution Prevention Team
- Advanced BMPs if applicable
- Visual monitoring, and stormwater sampling and analysis
- Annual Evaluation, pertinent dates, and amendments

Minimum Best Management Practices (BMPs)

This IGP requires the industrial facility operator to implement a set of BMPs. BMPs are necessary to serve as the basis to protect water quality and compliance with the permit's technology-based standards.
BMPs are specific to the facility type, however, minimum BMPs are:

- Good Housekeeping
- Preventative Maintenance
- Spill and Leak Prevention Response
- Material Handling and Waste Management
- Erosion and Sediment Controls
- Employee Training Programs
- Quality Assurance and Record Keeping

Stormwater Sampling and Analysis

Stormwater samples are to be collected at all locations that discharge stormwater during qualifying storm events within the first half of each reporting year (July 1 to December 31) and two events within the second half of each reporting year (January 1 to June 30).

Stormwater samples need to be collected from each drainage location soon after it begins to rain. All samples typically need to be sent to a laboratory and analyzed for suspended solids, pH, and oil & grease. Additional parameters may be required for analysis based on the SIC code of the facility.

The industrial facility operator must submit all sampling and analysis results to the State Water Board through the SMARTS website within 30 days of obtaining all results for each sampling event.

If the water quality samples collected onsite do not meet the IGP standards, a Qualified Industrial Stormwater Practitioner (QISP) may have to assist with assessments, and establishing and reportingAdvanced BMPs.

Qualified Industrial Stormwater Practitioner (QISP)

The IGP requires industrial facilities to be rated according to their compliance status level. If a facility has reached Level 1 compliance status according to their water quality samples, the industrial facility is required to designate a QISP who must complete a state-sponsored training course, register online, and obtain an identification number.
Professionals certified with the California Board of Professional Engineers and Land Surveyors can participate in a self-guided registration and online training program. A QISP can represent either one facility or multiple facilities but must be able to perform the

functions required by the permit at all times. Specific tasks that require a QISP include: Level 1 and 2 reporting and action plans.

Advanced Best Management Practices

If the water quality samples collected onsite do not meet the IGP standards, Advanced BMPs may be required. Advanced BMPs include:

- Shelters which prevent materials to be in contact with stormwater;
- Stormwater containment and discharge reduction; and
- Treatment Controls which consist of mechanical, chemical, or biologic technology.

Special Requirements for Plastic Materials

Please note that facilities handling plastic materials are required to implement additional BMPs to eliminate plastic in stormwater. Plastic materials may be recycled plastic resin pellets, powders, flakes, powdered additives, regrind, dust, and other similar types of preproduction plastics. The requirements include, but are not limited to special containment systems, sealed containers, vacuum systems, and additional training.

© 2020 - Riverside County Flood Control and Water Conservation District

IRRIGATION RUNOFF

STORMWATER FACT SHEET

Report Irrigation Runoff or Stormwater Pollution:
800.506.2555

RIVERSIDE COUNTY
WATERSHED PROTECTION

OVERWATERING

Overwatering causes irrigation runoff that may contain pollutants such as pesticides, herbicides, fertilizers, pet waste, yard waste, and sediments which can be hazardous to residents and harmful to our environment. Runoff can also serve as a transport mechanism for other pollutants already on the ground or in the curb gutter. Irrigation runoff entering the storm drain system is an illicit discharge.

BEST PRACTICES

Urban runoff begins when yards and landscaped areas are over-irrigated. Irrigation systems require regular maintenance and visual inspection of the system should be performed to prevent over-spray, leaks, and other problems that result in runoff to storm drains, curbs and gutters.

You can **prevent pollution** by conserving water on your property. Water during cooler times of the day (before 10am and after 6pm).

- Adjust sprinklers to stop overspray and runoff.
- Make needed repairs immediately.
- Use drip irrigation, soaker hoses, or micro-spray systems.
- Use an irrigation timer to pre-set watering times.
- Use a control nozzle or similar mechanism when watering by hand.
- Switch to a water-wise landscape - native plants need less fertilizers, herbicides, pesticides and water.

PROTECT OUR WATERSHED

Many people think that when water flows into a storm drain it is treated, but the storm drain system and the sanitary sewer system are not connected. Everything that enters storm drains flows untreated directly into our creeks, rivers, lakes, beaches and ultimately the ocean. Storm water often contains pollutants, including chemicals, trash, and automobile fluids, all of which pollute our watershed and harm fish and wildlife.

Whether at home or work, you can help reduce pollution and improve water quality by using the above Best Management Practices (BMP's) as part of your daily clean up and maintenance routine.

Stormwater Pollution Solutions

Residential

Recycle or properly dispose of household products that contain chemicals, such as insecticides, pesticides, paint, solvents, and used motor oil and other auto fluids. Don't pour them onto the ground or into storm drains.

Lawn care

Excess fertilizers and pesticides applied to lawns and gardens wash off and pollute streams. In addition, yard clippings and leaves can wash into storm drains and contribute nutrients and organic matter to streams.

- Don't overwater your lawn. Consider using a soaker hose instead of a sprinkler.
- Use pesticides and fertilizers sparingly. When use is necessary, use these chemicals in the recommended amounts. Use organic mulch or safer pest control methods whenever possible.
- Compost or mulch yard waste. Don't leave it in the street or sweep it into storm drains or streams.
- Cover piles of dirt or mulch being used in landscaping projects.

Auto care

Washing your car and degreasing auto parts at home can send detergents and other contaminants through the storm sewer system. Dumping automotive fluids into storm drains has the same result as dumping the materials directly into a waterbody.

- Use a commercial car wash that treats or recycles its wastewater, or wash your car on your yard so the water infiltrates into the ground.
- Repair leaks and dispose of used auto fluids and batteries at designated drop-off or recycling locations.

Septic systems

Leaking and poorly maintained septic systems release nutrients and pathogens (bacteria and viruses) that can be picked up by stormwater and discharged into nearby waterbodies. Pathogens can cause public health problems and environmental concerns.

- Inspect your system every 3 years and pump your tank as necessary (every 3 to 5 years).
- Don't dispose of household hazardous waste in sinks or toilets.

Pet waste

Pet waste can be a major source of bacteria and excess nutrients in local waters.

- When walking your pet, remember to pick up the waste and dispose of it properly. Flushing pet waste is the best disposal method. Leaving pet waste on the ground increases public health risks by allowing harmful bacteria and nutrients to wash into the storm drain and eventually into local waterbodies.

Education is essential to changing people's behavior. Signs and markers near storm drains warn residents that pollutants entering the drains will be carried untreated into a local waterbody.

Residential landscaping

Permeable Pavement—Traditional concrete and asphalt don't allow water to soak into the ground. Instead these surfaces rely on storm drains to divert unwanted water. Permeable pavement systems allow rain and snowmelt to soak through, decreasing stormwater runoff.

Rain Barrels—You can collect rainwater from rooftops in mosquito-proof containers. The water can be used later on lawn or garden areas.

Rain Gardens and Grassy Swales—Specially designed areas planted with native plants can provide natural places for rainwater to collect and soak into the ground. Rain from rooftop areas or paved areas can be diverted into these areas rather than into storm drains.

Vegetated Filter Strips—Filter strips are areas of native grass or plants created along roadways or streams. They trap the pollutants stormwater picks up as it flows across driveways and streets.

Commercial

Dirt, oil, and debris that collect in parking lots and paved areas can be washed into the storm sewer system and eventually enter local waterbodies.

- Sweep up litter and debris from sidewalks, driveways and parking lots, especially around storm drains.
- Cover grease storage and dumpsters and keep them clean to avoid leaks.
- Report any chemical spill to the local hazardous waste cleanup team. They'll know the best way to keep spills from harming the environment.

Erosion controls that aren't maintained can cause excessive amounts of sediment and debris to be carried into the stormwater system. Construction vehicles can leak fuel, oil, and other harmful fluids that can be picked up by stormwater and deposited into local waterbodies.

- Divert stormwater away from disturbed or exposed areas of the construction site.
- Install silt fences, vehicle mud removal areas, vegetative cover, and other sediment and erosion controls and properly maintain them, especially after rainstorms.
- Prevent soil erosion by minimizing disturbed areas during construction projects, and seed and mulch bare areas as soon as possible.

Construction

Agriculture

Lack of vegetation on streambanks can lead to erosion. Overgrazed pastures can also contribute excessive amounts of sediment to local waterbodies. Excess fertilizers and pesticides can poison aquatic animals and lead to destructive algae blooms. Livestock in streams can contaminate waterways with bacteria, making them unsafe for human contact.

- Keep livestock away from streambanks and provide them a water source away from waterbodies.
- Store and apply manure away from waterbodies and in accordance with a nutrient management plan.
- Vegetate riparian areas along waterways.
- Rotate animal grazing to prevent soil erosion in fields.
- Apply fertilizers and pesticides according to label instructions to save money and minimize pollution.

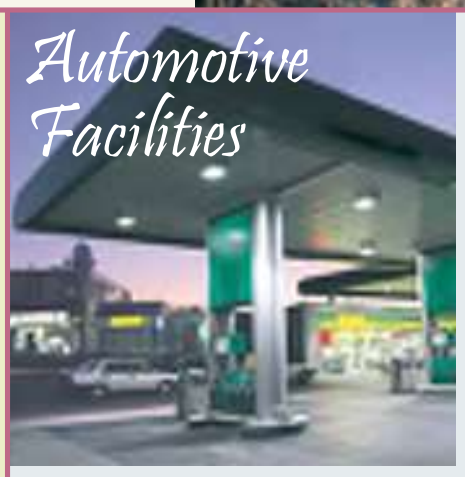

Automotive Facilities

Uncovered fueling stations allow spills to be washed into storm drains. Cars waiting to be repaired can leak fuel, oil, and other harmful fluids that can be picked up by stormwater.

- Clean up spills immediately and properly dispose of cleanup materials.
- Provide cover over fueling stations and design or retrofit facilities for spill containment.
- Properly maintain fleet vehicles to prevent oil, gas, and other discharges from being washed into local waterbodies.
- Install and maintain oil/water separators.

Forestry

Improperly managed logging operations can result in erosion and sedimentation.

- Conduct preharvest planning to prevent erosion and lower costs.
- Use logging methods and equipment that minimize soil disturbance.
- Plan and design skid trails, yard areas, and truck access roads to minimize stream crossings and avoid disturbing the forest floor.
- Construct stream crossings so that they minimize erosion and physical changes to streams.
- Expedite revegetation of cleared areas.

EPA United States Environmental Protection Agency

EPA 833-B-03-002

January 2003

Internet Address (URL) • HTTP://www.epa.gov
Recycled/Recyclable • Printed With Vegetable Oil Based Inks on 100% Postconsumer, Process Chlorine Free Recycled Paper

After the Storm

For more information contact:

or visit
www.epa.gov/npdes/stormwater
www.epa.gov/nps

What is stormwater runoff?

Stormwater runoff occurs when precipitation from rain or snowmelt flows over the ground. Impervious surfaces like driveways, sidewalks, and streets prevent stormwater from naturally soaking into the ground.

Why is stormwater runoff a problem?

Stormwater can pick up debris, chemicals, dirt, and other pollutants and flow into a storm sewer system or directly to a lake, stream, river, wetland, or coastal water. Anything that enters a storm sewer system is discharged untreated into the waterbodies we use for swimming, fishing, and providing drinking water.

The effects of pollution

Polluted stormwater runoff can have many adverse effects on plants, fish, animals, and people.

- Sediment can cloud the water and make it difficult or impossible for aquatic plants to grow. Sediment also can destroy aquatic habitats.
- Excess nutrients can cause algae blooms. When algae die, they sink to the bottom and decompose in a process that removes oxygen from the water. Fish and other aquatic organisms can't exist in water with low dissolved oxygen levels.

- Bacteria and other pathogens can wash into swimming areas and create health hazards, often making beach closures necessary.
- Debris—plastic bags, six-pack rings, bottles, and cigarette butts—washed into waterbodies can choke, suffocate, or disable aquatic life like ducks, fish, turtles, and birds.
- Household hazardous wastes like insecticides, pesticides, paint, solvents, used motor oil, and other auto fluids can poison aquatic life. Land animals and people can become sick or die from eating diseased fish and shellfish or ingesting polluted water.
- Polluted stormwater often affects drinking water sources. This, in turn, can affect human health and increase drinking water treatment costs.

For Information:

For information on "closed-loop" suppliers and recycling/disposal vendors, contact:
County of Riverside
Health Services Agency
Department of Environmental Health
at (909) 358-5055.

SPILL RESPONSE AGENCY:
HAZ-MAT: (909) 358-5055
AFTER 5:00 P.M.: (909) 358-5245 OR 911

HAZARDOUS WASTE DISPOSAL: (909) 358-5055

RECYCLING INFORMATION: 1-800-366-SAVE

TO REPORT ILLEGAL DUMPING OR A CLOGGED STORM DRAIN: 1-800-506-2555

To order additional brochures or to obtain information on other pollution prevention activities, call: (909) 955-1111.

The Cities and County of Riverside
StormWater/CleanWater Protection Program
1-800-506-2555

StormWater
CleanWater
PROTECTION PROGRAM

Riverside County gratefully acknowledges the Santa Clara Valley Nonpoint Source Pollution Control Program, Alameda Countywide Clean Water Program and the San Bernardino County Stormwater Program for information provided in this brochure.

StormWater Pollution

What you should know for...

THE FOOD SERVICE INDUSTRY

Best Management Practices (BMPS) for:

- Restaurants
- Grocery Stores
- Delicatessens
- Bakeries

StormWater Pollution . . . What You Should Know

Riverside County has two drainage systems - sanitary sewers and storm drains. The storm drain system is designed to help prevent flooding by carrying excess rainwater away from streets. Since the storm drain system does not provide for water treatment, it also serves the *unintended* function of transporting pollutants directly to our waterways.

Unlike sanitary sewers, storm drains are not connected to a treatment plant - they flow directly to our local streams, rivers and lakes.

Waste or washwater generated by the food service industry often contains materials such as food wastes, oil, grease, detergents, and degreasers. These materials can degrade local waters when allowed to flow into a storm drain system.

Stormwater pollution causes as much as 60% of our water pollution problem. It jeopardizes the quality of our waterways and poses a threat to groundwater resources if pollutants percolate through soil.

The Cities and County of Riverside StormWater/CleanWater Protection Program

Since preventing pollution is much easier, and less costly, than cleaning up "after the fact," the Cities and County of Riverside StormWater/CleanWater Protection Program informs residents and businesses on pollution prevention activities such as the Best Management Practices (BMPs) described in this pamphlet.

The Cities and County of Riverside have adopted ordinances for stormwater management and discharge control. In accordance with state and federal law, these local stormwater ordinances **prohibit** the discharge of wastes into the storm drain system or local surface waters. This includes discharges from the food service industry containing food wastes, oil, grease, detergents, and degreasers.

PLEASE NOTE: A common stormwater pollution problem associated with the food service industry is the discharge of washwater into alleys and gutters, and the hosing down of outdoor areas. Often, these activities flush pollutants into the storm drain system. The discharges of pollutants is ***strictly prohibited*** by local ordinances and state and federal regulations.

A Menu of Activities . . . to Keep Our Water Clean

Cleanin' It Right . . .

Pour mop and wash water into the mop sink or down floor drains . . . not into gutters, alleys, parking lots or a storm drain. Wash greasy equipment only in designated wash areas which are properly connected to the sewer system with an appropriate oil/water separator. Also, avoid washing kitchen mats, garbage containers, and other items in areas where wastewater is likely to flow into a storm drain.

Watch Out For Spills . . .

Use dry methods for spill cleanup. Don't hose down outside spills. Use rags or absorbents such as cat litter and then dispose of in the garbage, or handle as hazardous waste as appropriate. If necessary, mop the area with a minimum amount of water.

Proper Storage and Disposal . . .

General cleaners, floor cleaners, solvents, and detergents often contain toxic substances. Read labels carefully and store and dispose of these products properly.

REMEMBER: Don't throw toxic waste into the trash or into a storm drain. To report toxic spill call 911. For information on hazardous waste pick-up call (909) 358-5055.

Grease and Oil . . .

Handle and dispose of grease properly. Save used cooking grease and oil for recycling in tallow bins or sealed containers. Never pour grease into a sink, floor drain, dumpster or storm drain.

Watch out for, and report to management, overflowing grease interceptors. Call (909) 358-5172 for disposal information.

How 'Bout That Dumpster . . .

Keep dumpster and loading dock areas clean. Control litter by sweeping - don't hose down the area. Replace leaky dumpsters and keep lids closed to keep out rainwater.

Use Water-Friendly Products . . .

Whenever possible, purchase water-based cleaning products. Look for products labeled "non-toxic," "non-petroleum based," "ammonia-free," "phosphate-free," and "perfume-free," or "readily biodegradable."

Outdoor/Sidewalk Areas . . .

Sweep up food particles, cigarette butts, and trash from outdoor dining areas before rinsing or steam cleaning. Don't use toxic bleaches or detergents when you pressure wash outdoor dining areas, entrances or surrounding sidewalk areas.

***You may be** already implementing many of the BMPs prescribed in this brochure. However, if you discover any potential problem areas, please consider using one or more of the recommended BMPS.*

***Also,** please note that the Riverside County Environmental Health Department will monitor potential sources of stormwater pollution activities during regularly scheduled inspections of food service facilities. If Health Department staff observe activities which may be contributing to stormwater pollution, suggestions will be provided and/or use of prescribed BMPS listed in this brochure will be offered.*

Please remember:

Everyone contributes a little to the problem of stormwater pollution. Now it's time for all of us to become part of the solution!

Stormwater Pollution

What you should know for...

Industrial & Commercial Facilities

Best Management Practices (BMPS) for:

- Industrial Facilities
- Commercial Facilities

Riverside County Stormwater Program Members

City of Banning
(951) 922-3105

City of Beaumont
(951) 769-8520

City of Calimesa
(909) 795-9801

City of Canyon Lake
(951) 244-2955

City of Cathedral City
(760) 770-0340

City of Coachella
(760) 398-3502

City of Corona
(951) 736-2447

City of Desert Hot Springs
(760) 329-6411

City of Eastvale
(951) 361-0900

City of Hemet
(951) 765-2300

City of Indian Wells
(760) 346-2489

City of Indio
(760) 391-4000

City of Jurupa Valley
(951) 332-6464

City of Lake Elsinore
(951) 674-3124

City of La Quinta
(760) 777-7000

City of Menifee
(951) 672-6777

City of Moreno Valley
(951) 413-3000

City of Murrieta
(951) 304-2489

City of Norco
(951) 270-5607

City of Palm Desert
(760) 346-0611

City of Palm Springs
(760) 323-8299

City of Perris
(951) 943-6100

City of Rancho Mirage
(760) 324-4511

City of Riverside
(951) 826-5311

City of San Jacinto
(951) 487-7330

City of Temecula
(951) 694-6444

City of Wildomar
(951) 677-7751

Coachella Valley Water District
(760) 398-2651

County of Riverside
(951) 955-1000

Riverside County Flood Control District
(951) 955-1200

YOU can prevent Stormwater Pollution following these practices...

Industrial and Commercial Facilities

The Riverside County Stormwater Program has identified a number of Best Management Practices (BMPs) for Industrial and Commercial Facilities. These BMPs control and reduce stormwater pollutants from reaching our storm drain system and ultimately our local water bodies. City and County ordinances require businesses to use these BMPs to protect our water quality. Local cities and the County are required to verify implementation of these BMPs by performing regular facility inspections.

Prohibited Discharges

Discontinue all non-stormwater discharges to the storm drain system. It is *prohibited* to discharge any chemicals, paints, debris, wastes or wastewater into the gutter, street or storm drain.

Outdoor Storage BMPs

- Install covers and secondary containment areas for all hazardous materials and wastes stored outdoors in accordance with County and/or City standards.
- Keep all temporary waste containers covered, at all times when not in use.
- Sweep outdoor areas instead of using a hose or pressure washer.
- Move all process operations including vehicle/equipment maintenance inside of the building or under a covered and contained area.
- Wash equipment and vehicles in a contained and covered wash bay which is closed-loop or connected to a clarifier sized to local standards and discharged to a sanitary sewer or take them to a commercial car wash.

Spills and Clean Up BMPs

- Keep the work site clean and orderly. Remove debris in a timely fashion. Sweep up the area.
- Clean up spills immediately when they occur, using dry clean up methods such as absorbent materials or sweep followed by proper disposal of materials.
- Always have a spill kit available near chemical loading dock doors and vehicle maintenance and fueling areas.
- Follow your Business Emergency Plan, as filed with the local Fire Department.
- Report all prohibited discharges and non-implementation of BMPs to your local Stormwater Coordinator as listed on the back of this pamphlet.
- Report hazardous materials spills to 951-358-5055 or call after hours to 951-782-2973 or, if an emergency, call the Fire Department's Haz Mat Team at 911.

Plastic Manufacturing Facilities BMPs

AB 258 requires plastic product manufacturers to use BMPs, such as safe storage and clean-up procedures to prevent plastic pellets (nurdles) from entering the waterway. The plastic pellets are released into the environment during transporting, packaging and processing and migrate to waterways through the storm drain system. AB 258 will help protect fish and wildlife from the hazards of plastic pollution.

Training BMPs

As prescribed by your City and County Stormwater Ordinance(s), train employees in spill procedures and prohibit non-stormwater discharges to the storm drain system. Applicable BMP examples can be found at www.cabmphandbooks.com.

Permitting

Stormwater discharges associated with specific categories for industrial facilities are regulated by the State Water Resources Control Board through an Industrial Stormwater General Permit. A copy of this General Permit and application forms are available at: www.waterboards.ca.gov, select stormwater then the industrial quick link.

To report illegal dumping or for more information on stormwater pollution prevention call: 1-800-506-2555 or e-mail us at: fcnpdes@rcflood.org.

Landscaping and garden maintenance activities can be major contributors to water pollution. Soils, yard wastes, over-watering and garden chemicals become part of the urban runoff mix that winds its way through streets, gutters and storm drains before entering lakes, rivers, streams, etc. Urban runoff pollution contaminates water and harms aquatic life!

In Riverside County, report illegal discharges into the storm drain, call
1-800-506-2555
"Only Rain Down the Storm Drain"

Important Links:

Riverside County Household Hazardous Waste Collection Information
1-800-304-2226 or www.rivcowm.org

Riverside County Backyard Composting Program
1-800-366-SAVE

Integrated Pest Management (IPM) Solutions
www.ipm.ucdavis.edu

California Master Gardener Programs
www.mastergardeners.org
www.camastergardeners.ucdavis.edu

California Native Plant Society
www.cnps.org

The Riverside County "Only Rain Down the Storm Drain" Pollution Prevention Program gratefully acknowledges Orange County's Storm Water Program for their contribution to this brochure.

...Only Rain Down ...the Storm Drain

What you should know for... Landscape and Gardening

Best Management tips for:

- Professionals
- Novices
- Landscapers
- Gardeners
- Cultivators

Tips for Landscape & Gardening

This brochure will help you to get the most of your lawn and gardening efforts and keep our waterways clean. Clean waterways provide recreation, establish thriving fish habitats, secure safe sanctuaries for wildlife, and add beauty to our communities. NEVER allow gardening products or waste water to enter the street, gutter or storm drain.

General Landscaping Tips

- Protect stockpiles and materials from wind and rain by storing them under tarps or secured plastic sheeting.
- Prevent erosion of slopes by planting fast-growing, dense ground covering plants. These will shield and bind the soil.

- Plant native vegetation to reduce the amount of water, fertilizers and pesticides applied to the landscape.
- Never apply pesticides or fertilizers when rain is predicted within the next 48 hours.

Garden & Lawn Maintenance

- Do not overwater. Use irrigation practices such as drip irrigation, soaker hoses or micro-spray systems. Periodically inspect and fix leaks and misdirected sprinklers.
- Do not rake or blow leaves, clippings or pruning waste into the street, gutter or storm drain. Instead, dispose of green waste by composting, hauling it to a permitted landfill, or recycling it through your city's program.

- Consider recycling your green waste and adding "nature's own fertilizer" to your lawn or garden.
- Read labels and use only as directed. Do not over-apply pesticides or fertilizers. Apply to spots as needed, rather than blanketing an entire area.
- Store pesticides, fertilizers and other chemicals in a dry covered area to prevent exposure that may result in the deterioration of containers and packaging.
- Rinse empty pesticide containers and re-use rinse water as you would use the product. Do not dump rinse water down storm drains or sewers. Dispose of empty containers in the trash.
- When available, use non-toxic alternatives to traditional pesticides, and use pesticides specifically designed to control the pest you are targeting.
- Try natural long-term common sense solutions first. Integrated Pest Management (IPM) can provide landscaping guidance and solutions, such as:
  - **Physical Controls** - Try hand picking, barriers, traps or caulking holes to control weeds and pests.
  - **Biological Controls** - Use predatory insects to control harmful pests.
  - **Chemical Controls** - Check out www.ipm.ucdavis.edu before using chemicals. Remember, all chemicals should be used cautiously and in moderation.
- If fertilizer is spilled, sweep up the spill before irrigating. If the spill is liquid, apply an absorbent material such as cat litter, and then sweep it up and dispose of it in the trash.
- Take unwanted pesticides to a Household Waste Collection Center to be recycled.
- *Dumping toxics into the street, gutter or storm drain is illegal!*

www.bewaterwise.com Great water conservation tips and drought tolerant garden designs.

www.ourwaterourworld.com Learn how to safely manage home and garden pests.

Additional information can also be found on the back of this brochure.

Helpful telephone numbers and links:

Riverside County Stormwater Protection Partners

Flood Control District	(951) 955-1200
County of Riverside	(951) 955-1000
City of Banning	(951) 922-3105
City of Beaumont	(951) 769-8520
City of Calimesa	(909) 795-9801
City of Canyon Lake	(951) 244-2955
Cathedral City	(760) 770-0327
City of Coachella	(760) 398-4978
City of Corona	(951) 736-2447
City of Desert Hot Springs	(760) 329-6411
City of Eastvale	(951) 361-0900
City of Hemet	(951) 765-2300
City of Indian Wells	(760) 346-2489
City of Indio	(760) 391-4000
City of Lake Elsinore	(951) 674-3124
City of La Quinta	(760) 777-7000
City of Menifee	(951) 672-6777
City of Moreno Valley	(951) 413-3000
City of Murrieta	(951) 304-2489
City of Norco	(951) 270-5607
City of Palm Desert	(760) 346-0611
City of Palm Springs	(760) 323-8299
City of Perris	(951) 943-6100
City of Rancho Mirage	(760) 324-4511
City of Riverside	(951) 361-0900
City of San Jacinto	(951) 654-7337
City of Temecula	(951) 694-6444
City of Wildomar	(951) 677-7751

REPORT ILLEGAL STORM DRAIN DISPOSAL
1-800-506-2555 or e-mail us at
fcnpdes@rcflood.org

- Riverside County Flood Control and Water Conservation District
  www.rcflood.org

Online resources include:

- California Storm Water Quality Association
  www.casqa.org
- State Water Resources Control Board
  www.waterboards.ca.gov
- Power Washers of North America
  www.thepwna.org

Stormwater Pollution

What you should know for...

Outdoor Cleaning Activities and Professional Mobile Service Providers

Storm drain pollution prevention information for:

- Car Washing / Mobile Detailers
- Window and Carpet Cleaners
- Power Washers
- Waterproofers / Street Sweepers
- Equipment cleaners or degreasers and all mobile service providers

Do you know where street flows actually go?

Storm drains are NOT connected to sanitary sewer systems and treatment plants!

The primary purpose of storm drains is to carry *rain* water away from developed areas to prevent flooding. Pollutants discharged to storm drains are transported directly into rivers, lakes and streams. Soaps, degreasers, automotive fluids, litter and a host of materials are washed off buildings, sidewalks, plazas and parking areas. Vehicles and equipment must be properly managed to prevent the pollution of local waterways.

Unintentional spills by mobile service operators can flow into storm drains and pollute our waterways. **Avoid mishaps.** *Always* have a **Spill Response Kit** on hand to clean up unintentional spills. Only emergency **Mechanical** repairs should be done in City streets, using drip pans for spills. **Plumbing** should be done on private property. Always store chemicals in a leak-proof container and keep covered when not in use. **Window/Power Washing** waste water shouldn't be released into the streets, but should be disposed of in a sanitary sewer, landscaped area or in the soil. Soiled **Carpet Cleaning** wash water should be filtered before being discharged into the sanitary sewer. Dispose of all filter debris properly. **Car Washing/Detailing** operators should wash cars on private property and use a regulated hose nozzle for water flow control and runoff prevention. Capture and dispose of waste water and chemicals properly. Remember, storm drains are for receiving rain water runoff only.

REPORT ILLEGAL STORM DRAIN DISPOSAL 1-800-506-2555

Help Protect Our Waterways!

Use these guidelines for Outdoor Cleaning Activities and Wash Water Disposal

Did you know that disposing of pollutants into the street, gutter, storm drain or body of water is *PROHIBITED* by law and can result in stiff penalties?

Best Management Practices

Waste wash water from Mechanics, Plumbers, Window/Power Washers, Carpet Cleaners, Car Washing and Mobile Detailing activities may contain significant quantities of motor oil, grease, chemicals, dirt, detergents, brake pad dust, litter and other materials.

Best Management Practices, or BMPs as they are known, are guides to prevent pollutants from entering the storm drains. ***Each of us*** can do our part to keep stormwater clean by using the suggested BMPs below:

Simple solutions for both light and heavy duty jobs:

Do...consider dry cleaning methods first such as a mop, broom, rag or wire brush. Always keep a spill response kit on site.

Do...prepare the work area before power cleaning by using sand bags, rubber mats, vacuum booms, containment pads or temporary berms to keep wash water away from the gutters and storm drains.

Do...use vacuums or other machines to remove and collect loose debris or litter before applying water.

Do...obtain the property owner's permission to dispose of ***small amounts*** of power washing waste water on to landscaped, gravel or unpaved surfaces.

Do...check your local sanitary sewer agency's policies on wash water disposal regulations before disposing of wash water into the sewer. (See list on reverse side)

Do...be aware that if discharging to landscape areas, soapy wash water may damage landscaping. Residual wash water may remain on paved surfaces to evaporate. Sweep up solid residuals and dispose of properly. Vacuum booms are another option for capturing and collecting wash water.

Do...check to see if local ordinances prevent certain activities.

Do not let...wash or waste water from sidewalk, plaza or building cleaning go into a street or storm drain.

...ONLY RAIN... DOWN THE STORM DRAIN

Report illegal storm drain disposal
Call Toll Free
1-800-506-2555

Using Cleaning Agents

Try using biodegradable/phosphate-free products. They are easier on the environment, but don't confuse them with being toxic free. Soapy water entering the storm drain system can impact the delicate aquatic environment.

When cleaning surfaces with a ***high-pressure washer*** or ***steam cleaner***, additional precautions should be taken to prevent the discharge of pollutants into the storm drain system. These two methods of surface cleaning can loosen additional material that can contaminate local waterways.

Think Water Conservation

Minimize water use by using high pressure, low volume nozzles. Be sure to check all hoses for leaks. Water is a precious resource, don't let it flow freely and be sure to shut it off in between uses.

Screening Wash Water

Conduct thorough dry cleanup before washing exterior surfaces, such as buildings and decks ***with loose paint***, sidewalks or plaza areas. Keep debris from entering the storm drain after cleaning by first passing the wash water through a "20 mesh" or finer screen to catch the solid materials, then dispose of the mesh in a refuse container. Do not let the remaining wash water enter a street, gutter or storm drain.

Drain Inlet Protection & Collection of Wash Water

- Prior to any washing, block all storm drains with an impervious barrier such as sandbags or berms, or seal the storm drain with plugs or other appropriate materials.
- Create a containment area with berms and traps or take advantage of a low spot to keep wash water contained.
- Wash vehicles and equipment on grassy or gravel areas so that the wash water can seep into the ground.
- Pump or vacuum up all wash water in the contained area.

Concrete/Coring/Saw Cutting and Drilling Projects

Protect any down-gradient inlets by using dry activity techniques whenever possible. If water is used, minimize the amount of water used during the coring/drilling or saw cutting process. Place a barrier of sandbags and/or absorbent berms to protect the storm drain inlet or watercourse. Use a shovel or wet vacuum to remove the residue from the pavement. Do not wash residue or particulate matter into a storm drain inlet or watercourse.

Non-Stormwater Discharges SC-10

Art Credit: Margie Winter

Objectives

- Cover
- Contain
- Educate
- Reduce/Minimize
- Product Substitution

Targeted Constituents

Sediment	
Nutrients	✓
Trash	
Metals	✓
Bacteria	✓
Oil and Grease	✓
Organics	✓

Description

Non-stormwater discharges are those flows that do not consist entirely of stormwater. Some non-stormwater discharges do not include pollutants and may be discharged to the storm drain. These include uncontaminated groundwater and natural springs. There are also some non-stormwater discharges that typically do not contain pollutants and may be discharged to the storm drain with conditions. These include car washing, air conditioner condensate, etc. However there are certain non-stormwater discharges that pose environmental concern. These discharges may originate from illegal dumping or from internal floor drains, appliances, industrial processes, sinks, and toilets that are connected to the nearby storm drainage system. These discharges (which may include: process waste waters, cooling waters, wash waters, and sanitary wastewater) can carry substances such as paint, oil, fuel and other automotive fluids, chemicals and other pollutants into storm drains. They can generally be detected through a combination of detection and elimination. The ultimate goal is to effectively eliminate non-stormwater discharges to the stormwater drainage system through implementation of measures to detect, correct, and enforce against illicit connections and illegal discharges of pollutants on streets and into the storm drain system and creeks.

Approach

Initially the industry must make an assessment of non-stormwater discharges to determine which types must be eliminated or addressed through BMPs. The focus of the following approach is in the elimination of non-stormwater discharges.

CASQA
California Stormwater Quality Association

Pollution Prevention

- Ensure that used oil, used antifreeze, and hazardous chemical recycling programs are being implemented. Encourage litter control.

Suggested Protocols

Recommended Complaint Investigation Equipment

- Field Screening Analysis
  - pH paper or meter
  - Commercial stormwater pollutant screening kit that can detect for reactive phosphorus, nitrate nitrogen, ammonium nitrogen, specific conductance, and turbidity
  - Sample jars
  - Sample collection pole
  - A tool to remove access hole covers
- Laboratory Analysis
  - Sample cooler
  - Ice
  - Sample jars and labels
  - Chain of custody forms
- Documentation
  - Camera
  - Notebook
  - Pens
  - Notice of Violation forms
  - Educational materials

General

- Develop clear protocols and lines of communication for effectively prohibiting non-stormwater discharges, especially those that are not classified as hazardous. These are often not responded to as effectively as they need to be.
- Stencil or demarcate storm drains, where applicable, to prevent illegal disposal of pollutants. Storm drain inlets should have messages such as “Dump No Waste Drains to Stream” stenciled or demarcated next to them to warn against ignorant or intentional dumping of pollutants into the storm drainage system.

- See SC44 Stormwater Drainage System Maintenance for additional information.

Illicit Connections

- Locate discharges from the industrial storm drainage system to the municipal storm drain system through review of "as-built" piping schematics.
- Isolate problem areas and plug illicit discharge points.
- Locate and evaluate all discharges to the industrial storm drain system.

Visual Inspection and Inventory

- Inventory and inspect each discharge point during dry weather.
- Keep in mind that drainage from a storm event can continue for a day or two following the end of a storm and groundwater may infiltrate the underground stormwater collection system. Also, non-stormwater discharges are often intermittent and may require periodic inspections.

Review Infield Piping

- A review of the "as-built" piping schematic is a way to determine if there are any connections to the stormwater collection system.
- Inspect the path of floor drains in older buildings.

Smoke Testing

- Smoke testing of wastewater and stormwater collection systems is used to detect connections between the two systems.
- During dry weather the stormwater collection system is filled with smoke and then traced to sources. The appearance of smoke at the base of a toilet indicates that there may be a connection between the sanitary and the stormwater system.

Dye Testing

- A dye test can be performed by simply releasing a dye into either your sanitary or process wastewater system and examining the discharge points from the stormwater collection system for discoloration.

TV Inspection of Drainage System

- TV Cameras can be employed to visually identify illicit connections to the industrial storm drainage system.

Illegal Dumping

- Regularly inspect and clean up hot spots and other storm drainage areas where illegal dumping and disposal occurs.
- On paved surfaces, clean up spills with as little water as possible. Use a rag for small spills, a damp mop for general cleanup, and absorbent material for larger spills. If the spilled material is hazardous, then the used cleanup materials are also hazardous and must be sent to a certified laundry (rags) or disposed of as hazardous waste.

- Never hose down or bury dry material spills. Sweep up the material and dispose of properly.
- Use adsorbent materials on small spills rather than hosing down the spill. Remove the adsorbent materials promptly and dispose of properly.
- For larger spills, a private spill cleanup company or Hazmat team may be necessary.

Once a site has been cleaned:

- Post "No Dumping" signs with a phone number for reporting dumping and disposal.
- Landscaping and beautification efforts of hot spots may also discourage future dumping, as well as provide open space and increase property values.
- Lighting or barriers may also be needed to discourage future dumping.
- See fact sheet SC11 Spill Prevention, Control, and Cleanup.

Inspection

- Regularly inspect and clean up hot spots and other storm drainage areas where illegal dumping and disposal occurs.
- Conduct field investigations of the industrial storm drain system for potential sources of non-stormwater discharges.
- Pro-actively conduct investigations of high priority areas. Based on historical data, prioritize specific geographic areas and/or incident type for pro-active investigations.

Reporting

- A database is useful for defining and tracking the magnitude and location of the problem.
- Report prohibited non-stormwater discharges observed during the course of normal daily activities so they can be investigated, contained, and cleaned up or eliminated.
- Document that non-stormwater discharges have been eliminated by recording tests performed, methods used, dates of testing, and any on-site drainage points observed.
- Document and report annually the results of the program.
- Maintain documentation of illicit connection and illegal dumping incidents, including significant conditionally exempt discharges that are not properly managed.

Training

- Training of technical staff in identifying and documenting illegal dumping incidents is required.
- Consider posting the quick reference table near storm drains to reinforce training.
- Train employees to identify non-stormwater discharges and report discharges to the appropriate departments.

- Educate employees about spill prevention and cleanup.
- Well-trained employees can reduce human errors that lead to accidental releases or spills. The employee should have the tools and knowledge to immediately begin cleaning up a spill should one occur. Employees should be familiar with the Spill Prevention Control and Countermeasure Plan.
- Determine and implement appropriate outreach efforts to reduce non-permissible non-stormwater discharges.
- Conduct spill response drills annually (if no events occurred to evaluate your plan) in cooperation with other industries.
- When a responsible party is identified, educate the party on the impacts of his or her actions.

Spill Response and Prevention

- See SC11 Spill Prevention Control and Cleanup.

Other Considerations

- Many facilities do not have accurate, up-to-date schematic drawings.

Requirements

Costs (including capital and operation & maintenance)

- The primary cost is for staff time and depends on how aggressively a program is implemented.
- Cost for containment and disposal is borne by the discharger.
- Illicit connections can be difficult to locate especially if there is groundwater infiltration.
- Indoor floor drains may require re-plumbing if cross-connections to storm drains are detected.

Maintenance (including administrative and staffing)

- Illegal dumping and illicit connection violations requires technical staff to detect and investigate them.

Supplemental Information

Further Detail of the BMP

Illegal Dumping

- Substances illegally dumped on streets and into the storm drain systems and creeks include paints, used oil and other automotive fluids, construction debris, chemicals, fresh concrete, leaves, grass clippings, and pet wastes. All of these wastes cause stormwater and receiving water quality problems as well as clog the storm drain system itself.
- Establish a system for tracking incidents. The system should be designed to identify the following:
  - Illegal dumping hot spots

- Types and quantities (in some cases) of wastes
- Patterns in time of occurrence (time of day/night, month, or year)
- Mode of dumping (abandoned containers, "midnight dumping" from moving vehicles, direct dumping of materials, accidents/spills)
- Responsible parties

One of the keys to success of reducing or eliminating illegal dumping is increasing the number of people at the facility who are aware of the problem and who have the tools to at least identify the incident, if not correct it. Therefore, train field staff to recognize and report the incidents.

What constitutes a "non-stormwater" discharge?

- Non-stormwater discharges to the stormwater collection system may include any water used directly in the manufacturing process (process wastewater), air conditioning condensate and coolant, non-contact cooling water, cooling equipment condensate, outdoor secondary containment water, vehicle and equipment wash water, sink and drinking fountain wastewater, sanitary wastes, or other wastewaters.

Permit Requirements

- Facilities subject to stormwater permit requirements must include a certification that the stormwater collection system has been tested or evaluated for the presence of non-stormwater discharges. The State's General Industrial Stormwater Permit requires that non-stormwater discharges be eliminated prior to implementation of the facility's SWPPP.

Performance Evaluation

- Review annually internal investigation results; assess whether goals were met and what changes or improvements are necessary.
- Obtain feedback from personnel assigned to respond to, or inspect for, illicit connections and illegal dumping incidents.

References and Resources

California's Nonpoint Source Program Plan http://www.swrcb.ca.gov/nps/index.html

Clark County Storm Water Pollution Control Manual
http://www.co.clark.wa.us/pubworks/bmpman.pdf

King County Storm Water Pollution Control Manual http://dnr.metrokc.gov/wlr/dss/spcm.htm

Santa Clara Valley Urban Runoff Pollution Prevention Program http://www.scvurppp.org

The Storm Water Managers Resource Center http://www.stormwatercenter.net/

Spill Prevention, Control & Cleanup SC-11

Photo Credit: Geoff Brosseau

Objectives

- Cover
- Contain
- Educate
- Reduce/Minimize
- Product Substitution

Targeted Constituents

Sediment	
Nutrients	
Trash	
Metals	☑
Bacteria	
Oil and Grease	☑
Organics	☑

Description

Many activities that occur at an industrial or commercial site have the potential to cause accidental or illegal spills. Preparation for accidental or illegal spills, with proper training and reporting systems implemented, can minimize the discharge of pollutants to the environment.

Spills and leaks are one of the largest contributors of stormwater pollutants. Spill prevention and control plans are applicable to any site at which hazardous materials are stored or used. An effective plan should have spill prevention and response procedures that identify potential spill areas, specify material handling procedures, describe spill response procedures, and provide spill clean-up equipment. The plan should take steps to identify and characterize potential spills, eliminate and reduce spill potential, respond to spills when they occur in an effort to prevent pollutants from entering the stormwater drainage system, and train personnel to prevent and control future spills.

Approach

Pollution Prevention

- Develop procedures to prevent/mitigate spills to storm drain systems. Develop and standardize reporting procedures, containment, storage, and disposal activities, documentation, and follow-up procedures.

- Develop a Spill Prevention Control and Countermeasure (SPCC) Plan. The plan should include:

- Description of the facility, owner and address, activities and chemicals present
- Facility map
- Notification and evacuation procedures
- Cleanup instructions
- Identification of responsible departments
- Identify key spill response personnel

- Recycle, reclaim, or reuse materials whenever possible. This will reduce the amount of process materials that are brought into the facility.

Suggested Protocols (including equipment needs)

Spill Prevention

- Develop procedures to prevent/mitigate spills to storm drain systems. Develop and standardize reporting procedures, containment, storage, and disposal activities, documentation, and follow-up procedures.

- If consistent illegal dumping is observed at the facility:
  - Post "No Dumping" signs with a phone number for reporting illegal dumping and disposal. Signs should also indicate fines and penalties applicable for illegal dumping.
  - Landscaping and beautification efforts may also discourage illegal dumping.
  - Bright lighting and/or entrance barriers may also be needed to discourage illegal dumping.

- Store and contain liquid materials in such a manner that if the tank is ruptured, the contents will not discharge, flow, or be washed into the storm drainage system, surface waters, or groundwater.

- If the liquid is oil, gas, or other material that separates from and floats on water, install a spill control device (such as a tee section) in the catch basins that collects runoff from the storage tank area.

- Routine maintenance:
  - Place drip pans or absorbent materials beneath all mounted taps, and at all potential drip and spill locations during filling and unloading of tanks. Any collected liquids or soiled absorbent materials must be reused/recycled or properly disposed.
  - Store and maintain appropriate spill cleanup materials in a location known to all near the tank storage area; and ensure that employees are familiar with the site's spill control plan and/or proper spill cleanup procedures.
  - Sweep and clean the storage area monthly if it is paved, *do not hose down the area to a storm drain.*

- Check tanks (and any containment sumps) daily for leaks and spills. Replace tanks that are leaking, corroded, or otherwise deteriorating with tanks in good condition. Collect all spilled liquids and properly dispose of them.

- Label all containers according to their contents (e.g., solvent, gasoline).
- Label hazardous substances regarding the potential hazard (corrosive, radioactive, flammable, explosive, poisonous).
- Prominently display required labels on transported hazardous and toxic materials (per US DOT regulations).
- Identify key spill response personnel.

Spill Control and Cleanup Activities

- Follow the Spill Prevention Control and Countermeasure Plan.
- Clean up leaks and spills immediately.
- Place a stockpile of spill cleanup materials where it will be readily accessible (e.g., near storage and maintenance areas).
- On paved surfaces, clean up spills with as little water as possible. Use a rag for small spills, a damp mop for general cleanup, and absorbent material for larger spills. If the spilled material is hazardous, then the used cleanup materials are also hazardous and must be sent to a certified laundry (rags) or disposed of as hazardous waste. Physical methods for the cleanup of dry chemicals include the use of brooms, shovels, sweepers, or plows.
- Never hose down or bury dry material spills. Sweep up the material and dispose of properly.
- Chemical cleanups of material can be achieved with the use of adsorbents, gels, and foams. Use adsorbent materials on small spills rather than hosing down the spill. Remove the adsorbent materials promptly and dispose of properly.
- For larger spills, a private spill cleanup company or Hazmat team may be necessary.

Reporting

- Report spills that pose an immediate threat to human health or the environment to the Regional Water Quality Control Board.
- Federal regulations require that any oil spill into a water body or onto an adjoining shoreline be reported to the National Response Center (NRC) at 800-424-8802 (24 hour).
- Report spills to local agencies, such as the fire department; they can assist in cleanup.
- Establish a system for tracking incidents. The system should be designed to identify the following:

  - Types and quantities (in some cases) of wastes

  - Patterns in time of occurrence (time of day/night, month, or year)

- Mode of dumping (abandoned containers, "midnight dumping" from moving vehicles, direct dumping of materials, accidents/spills)
- Responsible parties

Training

- Educate employees about spill prevention and cleanup.
- Well-trained employees can reduce human errors that lead to accidental releases or spills:
  - The employee should have the tools and knowledge to immediately begin cleaning up a spill should one occur.
  - Employees should be familiar with the Spill Prevention Control and Countermeasure Plan.
- Employees should be educated about aboveground storage tank requirements. Employees responsible for aboveground storage tanks and liquid transfers should be thoroughly familiar with the Spill Prevention Control and Countermeasure Plan and the plan should be readily available.
- Train employees to recognize and report illegal dumping incidents.

Other Considerations (Limitations and Regulations)

- A Spill Prevention Control and Countermeasure Plan (SPCC) is required for facilities that are subject to the oil pollution regulations specified in Part 112 of Title 40 of the Code of Federal Regulations or if they have a storage capacity of 10,000 gallons or more of petroleum. (Health and Safety Code 6.67)
- State regulations also exist for storage of hazardous materials (Health & Safety Code Chapter 6.95), including the preparation of area and business plans for emergency response to the releases or threatened releases.
- Consider requiring smaller secondary containment areas (less than 200 sq. ft.) to be connected to the sanitary sewer, prohibiting any hard connections to the storm drain.

Requirements

Costs (including capital and operation & maintenance)

- Will vary depending on the size of the facility and the necessary controls.
- Prevention of leaks and spills is inexpensive. Treatment and/or disposal of contaminated soil or water can be quite expensive.

Maintenance (including administrative and staffing)

- This BMP has no major administrative or staffing requirements. However, extra time is needed to properly handle and dispose of spills, which results in increased labor costs.

Supplemental Information

Further Detail of the BMP

Reporting

Record keeping and internal reporting represent good operating practices because they can increase the efficiency of the facility and the effectiveness of BMPs. A good record keeping system helps the facility minimize incident recurrence, correctly respond with appropriate cleanup activities, and comply with legal requirements. A record keeping and reporting system should be set up for documenting spills, leaks, and other discharges, including discharges of hazardous substances in reportable quantities. Incident records describe the quality and quantity of non-stormwater discharges to the storm sewer. These records should contain the following information:

- Date and time of the incident
- Weather conditions
- Duration of the spill/leak/discharge
- Cause of the spill/leak/discharge
- Response procedures implemented
- Persons notified
- Environmental problems associated with the spill/leak/discharge

Separate record keeping systems should be established to document housekeeping and preventive maintenance inspections, and training activities. All housekeeping and preventive maintenance inspections should be documented. Inspection documentation should contain the following information:

- The date and time the inspection was performed
- Name of the inspector
- Items inspected
- Problems noted
- Corrective action required
- Date corrective action was taken

Other means to document and record inspection results are field notes, timed and dated photographs, videotapes, and drawings and maps.

Aboveground Tank Leak and Spill Control

Accidental releases of materials from aboveground liquid storage tanks present the potential for contaminating stormwater with many different pollutants. Materials spilled, leaked, or lost from

tanks may accumulate in soils or on impervious surfaces and be carried away by stormwater runoff.

The most common causes of unintentional releases are:

- Installation problems
- Failure of piping systems (pipes, pumps, flanges, couplings, hoses, and valves)
- External corrosion and structural failure
- Spills and overfills due to operator error
- Leaks during pumping of liquids or gases from truck or rail car to a storage tank or vice versa

Storage of reactive, ignitable, or flammable liquids should comply with the Uniform Fire Code and the National Electric Code. Practices listed below should be employed to enhance the code requirements:

- Tanks should be placed in a designated area.
- Tanks located in areas where firearms are discharged should be encapsulated in concrete or the equivalent.
- Designated areas should be impervious and paved with Portland cement concrete, free of cracks and gaps, in order to contain leaks and spills.
- Liquid materials should be stored in UL approved double walled tanks or surrounded by a curb or dike to provide the volume to contain 10 percent of the volume of all of the containers or 110 percent of the volume of the largest container, whichever is greater. The area inside the curb should slope to a drain.
- For used oil or dangerous waste, a dead-end sump should be installed in the drain.
- All other liquids should be drained to the sanitary sewer if available. The drain must have a positive control such as a lock, valve, or plug to prevent release of contaminated liquids.
- Accumulated stormwater in petroleum storage areas should be passed through an oil/water separator.

Maintenance is critical to preventing leaks and spills. Conduct routine inspections and:

- Check for external corrosion and structural failure.
- Check for spills and overfills due to operator error.
- Check for failure of piping system (pipes, pumps, flanger, coupling, hoses, and valves).
- Check for leaks or spills during pumping of liquids or gases from truck or rail car to a storage facility or vice versa.

- Visually inspect new tank or container installation for loose fittings, poor welding, and improper or poorly fitted gaskets.
- Inspect tank foundations, connections, coatings, and tank walls and piping system. Look for corrosion, leaks, cracks, scratches, and other physical damage that may weaken the tank or container system.
- Frequently relocate accumulated stormwater during the wet season.
- Periodically conduct integrity testing by a qualified professional.

Vehicle Leak and Spill Control

Major spills on roadways and other public areas are generally handled by highly trained Hazmat teams from local fire departments or environmental health departments. The measures listed below pertain to leaks and smaller spills at vehicle maintenance shops.

In addition to implementing the spill prevention, control, and clean up practices above, use the following measures related to specific activities:

Vehicle and Equipment Maintenance

- Perform all vehicle fluid removal or changing inside or under cover to prevent the run-on of stormwater and the runoff of spills.
- Regularly inspect vehicles and equipment for leaks, and repair immediately.
- Check incoming vehicles and equipment (including delivery trucks, and employee and subcontractor vehicles) for leaking oil and fluids. Do not allow leaking vehicles or equipment onsite.
- Always use secondary containment, such as a drain pan or drop cloth, to catch spills or leaks when removing or changing fluids.
- Immediately drain all fluids from wrecked vehicles.
- Store wrecked vehicles or damaged equipment under cover.
- Place drip pans or absorbent materials under heavy equipment when not in use.
- Use adsorbent materials on small spills rather than hosing down the spill.
- Remove the adsorbent materials promptly and dispose of properly.
- Promptly transfer used fluids to the proper waste or recycling drums. Don't leave full drip pans or other open containers lying around.
- Oil filters disposed of in trashcans or dumpsters can leak oil and contaminate stormwater. Place the oil filter in a funnel over a waste oil recycling drum to drain excess oil before disposal. Oil filters can also be recycled. Ask your oil supplier or recycler about recycling oil filters.

- Store cracked batteries in a non-leaking secondary container. Do this with all cracked batteries, even if you think all the acid has drained out. If you drop a battery, treat it as if it is cracked. Put it into the containment area until you are sure it is not leaking.

Vehicle and Equipment Fueling

- Design the fueling area to prevent the run-on of stormwater and the runoff of spills:
  - Cover fueling area if possible.
  - Use a perimeter drain or slope pavement inward with drainage to a sump.
  - Pave fueling area with concrete rather than asphalt.
- If dead-end sump is not used to collect spills, install an oil/water separator.
- Install vapor recovery nozzles to help control drips as well as air pollution.
- Discourage "topping-off" of fuel tanks.
- Use secondary containment when transferring fuel from the tank truck to the fuel tank.
- Use adsorbent materials on small spills and general cleaning rather than hosing down the area. Remove the adsorbent materials promptly.
- Carry out all Federal and State requirements regarding underground storage tanks, or install above ground tanks.
- Do not use mobile fueling of mobile industrial equipment around the facility; rather, transport the equipment to designated fueling areas.
- Keep your Spill Prevention Control and Countermeasure (SPCC) Plan up-to-date.
- Train employees in proper fueling and cleanup procedures.

Industrial Spill Prevention Response

For the purposes of developing a spill prevention and response program to meet the stormwater regulations, facility managers should use information provided in this fact sheet and the spill prevention/response portions of the fact sheets in this handbook, for specific activities. The program should:

- Integrate with existing emergency response/hazardous materials programs (e.g., Fire Department)
- Develop procedures to prevent/mitigate spills to storm drain systems
- Identify responsible departments
- Develop and standardize reporting procedures, containment, storage, and disposal activities, documentation, and follow-up procedures
- Address spills at municipal facilities, as well as public areas

- Provide training concerning spill prevention, response and cleanup to all appropriate personnel

References and Resources

California's Nonpoint Source Program Plan http://www.swrcb.ca.gov/nps/index.html

Clark County Storm Water Pollution Control Manual
http://www.co.clark.wa.us/pubworks/bmpman.pdf

King County Storm Water Pollution Control Manual http://dnr.metrokc.gov/wlr/dss/spcm.htm

Santa Clara Valley Urban Runoff Pollution Prevention Program http://www.scvurppp.org

The Stormwater Managers Resource Center http://www.stormwatercenter.net/

Waste Handling & Disposal SC-34

Photo Credit: Geoff Brosseau

Objectives

- Cover
- Contain
- Educate
- Reduce/Minimize
- Product Substitution

Description

Improper storage and handling of solid wastes can allow toxic compounds, oils and greases, heavy metals, nutrients, suspended solids, and other pollutants to enter stormwater runoff. The discharge of pollutants to stormwater from waste handling and disposal can be prevented and reduced by tracking waste generation, storage, and disposal; reducing waste generation and disposal through source reduction, reuse, and recycling; and preventing run-on and runoff.

Targeted Constituents

Sediment	
Nutrients	
Trash	
Metals	✓
Bacteria	✓
Oil and Grease	✓
Organics	✓

Approach

Pollution Prevention

- Accomplish reduction in the amount of waste generated using the following source controls:
  - Production planning and sequencing
  - Process or equipment modification
  - Raw material substitution or elimination
  - Loss prevention and housekeeping
  - Waste segregation and separation
  - Close loop recycling
- Establish a material tracking system to increase awareness about material usage. This may reduce spills and minimize contamination, thus reducing the amount of waste produced.
- Recycle materials whenever possible.

Suggested Protocols

General

- Cover storage containers with leak proof lids or some other means. If waste is not in containers, cover all waste piles (plastic tarps are acceptable coverage) and prevent stormwater run-on and runoff with a berm. The waste containers or piles must be covered except when in use.
- Use drip pans or absorbent materials whenever grease containers are emptied by vacuum trucks or other means. Grease cannot be left on the ground. Collected grease must be properly disposed of as garbage.
- Check storage containers weekly for leaks and to ensure that lids are on tightly. Replace any that are leaking, corroded, or otherwise deteriorating.
- Sweep and clean the storage area regularly. If it is paved, do not hose down the area to a storm drain.
- Dispose of rinse and wash water from cleaning waste containers into a sanitary sewer if allowed by the local sewer authority. Do not discharge wash water to the street or storm drain.
- Transfer waste from damaged containers into safe containers.
- Take special care when loading or unloading wastes to minimize losses. Loading systems can be used to minimize spills and fugitive emission losses such as dust or mist. Vacuum transfer systems can minimize waste loss.

Controlling Litter

- Post "No Littering" signs and enforce anti-litter laws.
- Provide a sufficient number of litter receptacles for the facility.
- Clean out and cover litter receptacles frequently to prevent spillage.

Waste Collection

- Keep waste collection areas clean.
- Inspect solid waste containers for structural damage regularly. Repair or replace damaged containers as necessary.
- Secure solid waste containers; containers must be closed tightly when not in use.
- Do not fill waste containers with washout water or any other liquid.
- Ensure that only appropriate solid wastes are added to the solid waste container. Certain wastes such as hazardous wastes, appliances, fluorescent lamps, pesticides, etc., may not be disposed of in solid waste containers (see chemical/ hazardous waste collection section below).

- Do not mix wastes; this can cause chemical reactions, make recycling impossible, and complicate disposal.

Good Housekeeping

- Use all of the product before disposing of the container.
- Keep the waste management area clean at all times by sweeping and cleaning up spills immediately.
- Use dry methods when possible (e.g., sweeping, use of absorbents) when cleaning around restaurant/food handling dumpster areas. If water must be used after sweeping/using absorbents, collect water and discharge through grease interceptor to the sewer.

Chemical/Hazardous Wastes

- Select designated hazardous waste collection areas on-site.
- Store hazardous materials and wastes in covered containers and protect them from vandalism.
- Place hazardous waste containers in secondary containment.
- Make sure that hazardous waste is collected, removed, and disposed of only at authorized disposal areas.
- Stencil or demarcate storm drains on the facility's property with prohibitive message regarding waste disposal.

Run-on/Runoff Prevention

- Prevent stormwater run-on from entering the waste management area by enclosing the area or building a berm around the area.
- Prevent waste materials from directly contacting rain.
- Cover waste piles with temporary covering material such as reinforced tarpaulin, polyethylene, polyurethane, polypropyleneor hypalon.
- Cover the area with a permanent roof if feasible.
- Cover dumpsters to prevent rain from washing waste out of holes or cracks in the bottom of the dumpster.
- Move the activity indoor after ensuring all safety concerns such as fire hazard and ventilation are addressed.

Inspection

- Inspect and replace faulty pumps or hoses regularly to minimize the potential of releases and spills.
- Check waste management areas for leaking containers or spills.

- Repair leaking equipment including valves, lines, seals, or pumps promptly.

Training

- Train staff in pollution prevention measures and proper disposal methods.
- Train employees and contractors in proper spill containment and cleanup. The employee should have the tools and knowledge to immediately begin cleaning up a spill should one occur.
- Train employees and subcontractors in proper hazardous waste management.

Spill Response and Prevention

- Keep your Spill Prevention Control and Countermeasure (SPCC) Plan up-to-date.
- Have an emergency plan, equipment and trained personnel ready at all times to deal immediately with major spills
- Collect all spilled liquids and properly dispose of them.
- Store and maintain appropriate spill cleanup materials in a location known to all near the designated wash area.
- Ensure that vehicles transporting waste have spill prevention equipment that can prevent spills during transport. Spill prevention equipment includes:
  - Vehicles equipped with baffles for liquid waste
  - Trucks with sealed gates and spill guards for solid waste

Other Considerations (Limitations and Regulations)

Hazardous waste cannot be reused or recycled; it must be disposed of by a licensed hazardous waste hauler.

Requirements

Costs

Capital and O&M costs for these programs will vary substantially depending on the size of the facility and the types of waste handled. Costs should be low if there is an inventory program in place.

Maintenance

- None except for maintaining equipment for material tracking program.

Supplemental Information

Further Detail of the BMP

Land Treatment System

Minimize runoff of polluted stormwater from land application by:

- Choosing a site where slopes are under 6%, the soil is permeable, there is a low water table, it is located away from wetlands or marshes, and there is a closed drainage system

- Avoiding application of waste to the site when it is raining or when the ground is saturated with water
- Growing vegetation on land disposal areas to stabilize soils and reduce the volume of surface water runoff from the site
- Maintaining adequate barriers between the land application site and the receiving waters (planted strips are particularly good)
- Using erosion control techniques such as mulching and matting, filter fences, straw bales, diversion terracing, and sediment basins
- Performing routine maintenance to ensure the erosion control or site stabilization measures are working

Examples

The port of Long Beach has a state-of-the-art database for identifying potential pollutant sources, documenting facility management practices, and tracking pollutants.

References and Resources

California's Nonpoint Source Program Plan http://www.swrcb.ca.gov/nps/index.html

Clark County Storm Water Pollution Control Manual
http://www.co.clark.wa.us/pubworks/bmpman.pdf

Solid Waste Container Best Management Practices – Fact Sheet On-Line Resources – Environmental Health and Safety. Harvard University. 2002.

King County Storm Water Pollution Control Manual http://dnr.metrokc.gov/wlr/dss/spcm.htm

Pollution from Surface Cleaning Folder. 1996. Bay Area Stormwater Management Agencies Association (BASMAA). http://www.basmaa.org

Santa Clara Valley Urban Runoff Pollution Prevention Program http://www.scvurppp.org

The Storm Water Managers Resource Center http://www.stormwatercenter.net/

Building & Grounds Maintenance SC-41

Objectives

- Cover
- Contain
- Educate
- Reduce/Minimize
- Product Substitution

Targeted Constituents

Sediment	✓
Nutrients	✓
Trash	
Metals	✓
Bacteria	✓
Oil and Grease	
Organics	

Description

Stormwater runoff from building and grounds maintenance activities can be contaminated with toxic hydrocarbons in solvents, fertilizers and pesticides, suspended solids, heavy metals, abnormal pH, and oils and greases. Utilizing the protocols in this fact sheet will prevent or reduce the discharge of pollutants to stormwater from building and grounds maintenance activities by washing and cleaning up with as little water as possible, following good landscape management practices, preventing and cleaning up spills immediately, keeping debris from entering the storm drains, and maintaining the stormwater collection system.

Approach

Reduce potential for pollutant discharge through source control pollution prevention and BMP implementation. Successful implementation depends on effective training of employees on applicable BMPs and general pollution prevention strategies and objectives.

Pollution Prevention

- Switch to non-toxic chemicals for maintenance when possible.
- Choose cleaning agents that can be recycled.
- Encourage proper lawn management and landscaping, including use of native vegetation.

CASQA
California Stormwater Quality Association

- Encourage use of Integrated Pest Management techniques for pest control.
- Encourage proper onsite recycling of yard trimmings.
- Recycle residual paints, solvents, lumber, and other material as much as possible.

Suggested Protocols

Pressure Washing of Buildings, Rooftops, and Other Large Objects

- In situations where soaps or detergents are used and the surrounding area is paved, pressure washers must use a water collection device that enables collection of wash water and associated solids. A sump pump, wet vacuum or similarly effective device must be used to collect the runoff and loose materials. The collected runoff and solids must be disposed of properly.
- If soaps or detergents are not used, and the surrounding area is paved, wash runoff does not have to be collected but must be screened. Pressure washers must use filter fabric or some other type of screen on the ground and/or in the catch basin to trap the particles in wash water runoff.
- If you are pressure washing on a grassed area (with or without soap), runoff must be dispersed as sheet flow as much as possible, rather than as a concentrated stream. The wash runoff must remain on the grass and not drain to pavement.

Landscaping Activities

- Dispose of grass clippings, leaves, sticks, or other collected vegetation as garbage, or by composting. Do not dispose of collected vegetation into waterways or storm drainage systems.
- Use mulch or other erosion control measures on exposed soils.

Building Repair, Remodeling, and Construction

- Do not dump any toxic substance or liquid waste on the pavement, the ground, or toward a storm drain.
- Use ground or drop cloths underneath outdoor painting, scraping, and sandblasting work, and properly dispose of collected material daily.
- Use a ground cloth or oversized tub for activities such as paint mixing and tool cleaning.
- Clean paintbrushes and tools covered with water-based paints in sinks connected to sanitary sewers or in portable containers that can be dumped into a sanitary sewer drain. Brushes and tools covered with non-water-based paints, finishes, or other materials must be cleaned in a manner that enables collection of used solvents (e.g., paint thinner, turpentine, etc.) for recycling or proper disposal.
- Use a storm drain cover, filter fabric, or similarly effective runoff control mechanism if dust, grit, wash water, or other pollutants may escape the work area and enter a catch basin. This is particularly necessary on rainy days. The containment device(s) must be in place at the beginning of the work day, and accumulated dirty runoff and solids must be collected and disposed of before removing the containment device(s) at the end of the work day.

- If you need to de-water an excavation site, you may need to filter the water before discharging to a catch basin or off-site. If directed off-site, you should direct the water through hay bales and filter fabric or use other sediment filters or traps.
- Store toxic material under cover during precipitation events and when not in use. A cover would include tarps or other temporary cover material.

Mowing, Trimming, and Planting

- Dispose of leaves, sticks, or other collected vegetation as garbage, by composting or at a permitted landfill. Do not dispose of collected vegetation into waterways or storm drainage systems.
- Use mulch or other erosion control measures when soils are exposed.
- Place temporarily stockpiled material away from watercourses and drain inlets, and berm or cover stockpiles to prevent material releases to the storm drain system.
- Consider an alternative approach when bailing out muddy water: do not put it in the storm drain; pour over landscaped areas.
- Use hand weeding where practical.

Fertilizer and Pesticide Management

- Follow all federal, state, and local laws and regulations governing the use, storage, and disposal of fertilizers and pesticides and training of applicators and pest control advisors.
- Use less toxic pesticides that will do the job when applicable. Avoid use of copper-based pesticides if possible.
- Do not use pesticides if rain is expected.
- Do not mix or prepare pesticides for application near storm drains.
- Use the minimum amount needed for the job.
- Calibrate fertilizer distributors to avoid excessive application.
- Employ techniques to minimize off-target application (e.g., spray drift) of pesticides, including consideration of alternative application techniques.
- Apply pesticides only when wind speeds are low.
- Fertilizers should be worked into the soil rather than dumped or broadcast onto the surface.
- Irrigate slowly to prevent runoff and then only as much as is needed.
- Clean pavement and sidewalk if fertilizer is spilled on these surfaces before applying irrigation water.
- Dispose of empty pesticide containers according to the instructions on the container label.

- Use up the pesticides. Rinse containers, and use rinse water as product. Dispose of unused pesticide as hazardous waste.
- Implement storage requirements for pesticide products with guidance from the local fire department and County Agricultural Commissioner. Provide secondary containment for pesticides.

Inspection

- Inspect irrigation system periodically to ensure that the right amount of water is being applied and that excessive runoff is not occurring. Minimize excess watering and repair leaks in the irrigation system as soon as they are observed.

Training

- Educate and train employees on pesticide use and in pesticide application techniques to prevent pollution.
- Train employees and contractors in proper techniques for spill containment and cleanup.
- Be sure the frequency of training takes into account the complexity of the operations and the nature of the staff.

Spill Response and Prevention

- Keep your Spill Prevention Control and Countermeasure (SPCC) Plan up-to-date.
- Place a stockpile of spill cleanup materials, such as brooms, dustpans, and vacuum sweepers (if desired) near the storage area where it will be readily accessible.
- Have employees trained in spill containment and cleanup present during the loading/unloading of dangerous wastes, liquid chemicals, or other materials.
- Familiarize employees with the Spill Prevention Control and Countermeasure Plan.
- Clean up spills immediately.

Other Considerations

Alternative pest/weed controls may not be available, suitable, or effective in many cases.

Requirements

Costs

- Cost will vary depending on the type and size of facility.
- Overall costs should be low in comparison to other BMPs.

Maintenance

Sweep paved areas regularly to collect loose particles. Wipe up spills with rags and other absorbent material immediately, do not hose down the area to a storm drain.

Supplemental Information

Further Detail of the BMP

Fire Sprinkler Line Flushing

Building fire sprinkler line flushing may be a source of non-stormwater runoff pollution. The water entering the system is usually potable water, though in some areas it may be non-potable reclaimed wastewater. There are subsequent factors that may drastically reduce the quality of the water in such systems. Black iron pipe is usually used since it is cheaper than potable piping, but it is subject to rusting and results in lower quality water. Initially, the black iron pipe has an oil coating to protect it from rusting between manufacture and installation; this will contaminate the water from the first flush but not from subsequent flushes. Nitrates, poly-phosphates and other corrosion inhibitors, as well as fire suppressants and antifreeze may be added to the sprinkler water system. Water generally remains in the sprinkler system a long time (typically a year) and between flushes may accumulate iron, manganese, lead, copper, nickel, and zinc. The water generally becomes anoxic and contains living and dead bacteria and breakdown products from chlorination. This may result in a significant BOD problem and the water often smells. Consequently dispose fire sprinkler line flush water into the sanitary sewer. Do not allow discharge to storm drain or infiltration due to potential high levels of pollutants in fire sprinkler line water.

References and Resources

California's Nonpoint Source Program Plan http://www.swrcb.ca.gov/nps/index.html

Clark County Storm Water Pollution Control Manual
http://www.co.clark.wa.us/pubworks/bmpman.pdf

King County Storm Water Pollution Control Manual http://dnr.metrokc.gov/wlr/dss/spcm.htm

Mobile Cleaners Pilot Program: Final Report. 1997. Bay Area Stormwater Management Agencies Association (BASMAA). http://www.basmaa.org/

Pollution from Surface Cleaning Folder. 1996. Bay Area Stormwater Management Agencies Association (BASMAA). http://www.basmaa.org/

Santa Clara Valley Urban Runoff Pollution Prevention Program http://www.scvurppp.org

The Storm Water Managers Resource Center http://www.stormwatercenter.net/

Drainage System Maintenance SC-44

Objectives

- Cover
- Contain
- Educate
- Reduce/Minimize

Targeted Constituents

Sediment	✓
Nutrients	
Trash	✓
Metals	
Bacteria	✓
Oil and Grease	
Organics	

Description

As a consequence of its function, the stormwater conveyance system collects and transports urban runoff and stormwater that may contain certain pollutants. The protocols in this fact sheet are intended to reduce pollutants reaching receiving waters through proper conveyance system operation and maintenance.

Approach

Pollution Prevention

Maintain catch basins, stormwater inlets, and other stormwater conveyance structures on a regular basis to remove pollutants, reduce high pollutant concentrations during the first flush of storms, prevent clogging of the downstream conveyance system, restore catch basins' sediment trapping capacity, and ensure the system functions properly hydraulically to avoid flooding.

Suggested Protocols

Catch Basins/Inlet Structures

- Staff should regularly inspect facilities to ensure compliance with the following:
  - Immediate repair of any deterioration threatening structural integrity.
  - Cleaning before the sump is 40% full. Catch basins should be cleaned as frequently as needed to meet this standard.
  - Stenciling of catch basins and inlets (see SC34 Waste Handling and Disposal).

- Clean catch basins, storm drain inlets, and other conveyance structures before the wet season to remove sediments and debris accumulated during the summer.
- Conduct inspections more frequently during the wet season for problem areas where sediment or trash accumulates more often. Clean and repair as needed.
- Keep accurate logs of the number of catch basins cleaned.
- Store wastes collected from cleaning activities of the drainage system in appropriate containers or temporary storage sites in a manner that prevents discharge to the storm drain.
- Dewater the wastes if necessary with outflow into the sanitary sewer if permitted. Water should be treated with an appropriate filtering device prior to discharge to the sanitary sewer. If discharge to the sanitary sewer is not allowed, water should be pumped or vacuumed to a tank and properly disposed. Do not dewater near a storm drain or stream.

Storm Drain Conveyance System

- Locate reaches of storm drain with deposit problems and develop a flushing schedule that keeps the pipe clear of excessive buildup.
- Collect and pump flushed effluent to the sanitary sewer for treatment whenever possible.

Pump Stations

- Clean all storm drain pump stations prior to the wet season to remove silt and trash.
- Do not allow discharge to reach the storm drain system when cleaning a storm drain pump station or other facility.
- Conduct routine maintenance at each pump station.
- Inspect, clean, and repair as necessary all outlet structures prior to the wet season.

Open Channel

- Modify storm channel characteristics to improve channel hydraulics, increase pollutant removals, and enhance channel/creek aesthetic and habitat value.
- Conduct channel modification/improvement in accordance with existing laws. Any person, government agency, or public utility proposing an activity that will change the natural (emphasis added) state of any river, stream, or lake in California, must enter into a Steam or Lake Alteration Agreement with the Department of Fish and Game. The developer-applicant should also contact local governments (city, county, special districts), other state agencies (SWRCB, RWQCB, Department of Forestry, Department of Water Resources), and Federal Corps of Engineers and USFWS.

Illicit Connections and Discharges

- Look for evidence of illegal discharges or illicit connections during routine maintenance of conveyance system and drainage structures:
  - Is there evidence of spills such as paints, discoloring, etc?

- Are there any odors associated with the drainage system?
- Record locations of apparent illegal discharges/illicit connections?
- Track flows back to potential dischargers and conduct aboveground inspections. This can be done through visual inspection of upgradient manholes or alternate techniques including zinc chloride smoke testing, fluorometric dye testing, physical inspection testing, or television camera inspection.
- Eliminate the discharge once the origin of flow is established.

- Stencil or demarcate storm drains, where applicable, to prevent illegal disposal of pollutants. Storm drain inlets should have messages such as "Dump No Waste Drains to Stream" stenciled next to them to warn against ignorant or intentional dumping of pollutants into the storm drainage system.
- Refer to fact sheet SC-10 Non-Stormwater Discharges.

Illegal Dumping

- Inspect and clean up hot spots and other storm drainage areas regularly where illegal dumping and disposal occurs.
- Establish a system for tracking incidents. The system should be designed to identify the following:
  - Illegal dumping hot spots
  - Types and quantities (in some cases) of wastes
  - Patterns in time of occurrence (time of day/night, month, or year)
  - Mode of dumping (abandoned containers, "midnight dumping" from moving vehicles, direct dumping of materials, accidents/spills)
  - Responsible parties
- Post "No Dumping" signs in problem areas with a phone number for reporting dumping and disposal. Signs should also indicate fines and penalties for illegal dumping.
- Refer to fact sheet SC-10 Non-Stormwater Discharges.

Training

- Train crews in proper maintenance activities, including record keeping and disposal.
- Allow only properly trained individuals to handle hazardous materials/wastes.
- Have staff involved in detection and removal of illicit connections trained in the following:
  - OSHA-required Health and Safety Training (29 CFR 1910.120) plus annual refresher training (as needed).

- OSHA Confined Space Entry training (Cal-OSHA Confined Space, Title 8 and Federal OSHA 29 CFR 1910.146).
- Procedural training (field screening, sampling, smoke/dye testing, TV inspection).

Spill Response and Prevention

- Investigate all reports of spills, leaks, and/or illegal dumping promptly.
- Clean up all spills and leaks using "dry" methods (with absorbent materials and/or rags) or dig up, remove, and properly dispose of contaminated soil.
- Refer to fact sheet SC-11 Spill Prevention, Control, and Cleanup.

Other Considerations (Limitations and Regulations)

- Clean-up activities may create a slight disturbance for local aquatic species. Access to items and material on private property may be limited. Trade-offs may exist between channel hydraulics and water quality/riparian habitat. If storm channels or basins are recognized as wetlands, many activities, including maintenance, may be subject to regulation and permitting.
- Storm drain flushing is most effective in small diameter pipes (36-inch diameter pipe or less, depending on water supply and sediment collection capacity). Other considerations associated with storm drain flushing may include the availability of a water source, finding a downstream area to collect sediments, liquid/sediment disposal, and prohibition against disposal of flushed effluent to sanitary sewer in some areas.
- Regulations may include adoption of substantial penalties for illegal dumping and disposal.
- Local municipal codes may include sections prohibiting discharge of soil, debris, refuse, hazardous wastes, and other pollutants into the storm drain system.

Requirements

Costs

- An aggressive catch basin cleaning program could require a significant capital and O&M budget.
- The elimination of illegal dumping is dependent on the availability, convenience, and cost of alternative means of disposal. The primary cost is for staff time. Cost depends on how aggressively a program is implemented. Other cost considerations for an illegal dumping program include:
  - Purchase and installation of signs.
  - Rental of vehicle(s) to haul illegally-disposed items and material to landfills.
  - Rental of heavy equipment to remove larger items (e.g., car bodies) from channels.
  - Purchase of landfill space to dispose of illegally-dumped items and material.

- Methods used for illicit connection detection (smoke testing, dye testing, visual inspection, and flow monitoring) can be costly and time-consuming. Site-specific factors, such as the level of impervious area, the density and ages of buildings, and type of land use will determine the level of investigation necessary.

Maintenance

- Two-person teams may be required to clean catch basins with vactor trucks.
- Teams of at least two people plus administrative personnel are required to identify illicit discharges, depending on the complexity of the storm sewer system.
- Arrangements must be made for proper disposal of collected wastes.
- Technical staff are required to detect and investigate illegal dumping violations.

Supplemental Information

Further Detail of the BMP

Storm Drain Flushing

Flushing is a common maintenance activity used to improve pipe hydraulics and to remove pollutants in storm drainage systems. Flushing may be designed to hydraulically convey accumulated material to strategic locations, such as an open channel, another point where flushing will be initiated, or the sanitary sewer and the treatment facilities, thus preventing resuspension and overflow of a portion of the solids during storm events. Flushing prevents "plug flow" discharges of concentrated pollutant loadings and sediments. Deposits can hinder the designed conveyance capacity of the storm drain system and potentially cause backwater conditions in severe cases of clogging.

Storm drain flushing usually takes place along segments of pipe with grades that are too flat to maintain adequate velocity to keep particles in suspension. An upstream manhole is selected to place an inflatable device that temporarily plugs the pipe. Further upstream, water is pumped into the line to create a flushing wave. When the upstream reach of pipe is sufficiently full to cause a flushing wave, the inflated device is rapidly deflated with the assistance of a vacuum pump, thereby releasing the backed up water and resulting in the cleaning of the storm drain segment.

To further reduce impacts of stormwater pollution, a second inflatable device placed well downstream may be used to recollect the water after the force of the flushing wave has dissipated. A pump may then be used to transfer the water and accumulated material to the sanitary sewer for treatment. In some cases, an interceptor structure may be more practical or required to recollect the flushed waters.

It has been found that cleansing efficiency of periodic flush waves is dependent upon flush volume, flush discharge rate, sewer slope, sewer length, sewer flow rate, sewer diameter, and population density. As a rule of thumb, the length of line to be flushed should not exceed 700 feet. At this maximum recommended length, the percent removal efficiency ranges between 65-75% for organics and 55-65% for dry weather grit/inorganic material. The percent removal efficiency drops rapidly beyond that. Water is commonly supplied by a water truck, but fire hydrants can also supply water. To make the best use of water, it is recommended that reclaimed water be used or that fire hydrant line flushing coincide with storm sewer flushing.

References and Resources

California's Nonpoint Source Program Plan http://www.swrcb.ca.gov/nps/index.html

Clark County Storm Water Pollution Control Manual
http://www.co.clark.wa.us/pubworks/bmpman.pdf

Ferguson, B.K. 1991. Urban Stream Reclamation, p. 324-322, Journal of Soil and Water Conservation.

King County Storm Water Pollution Control Manual http://dnr.metrokc.gov/wlr/dss/spcm.htm

Oregon Association of Clean Water Agencies. Oregon Municipal Stormwater Toolbox for Maintenance Practices. June 1998.

Santa Clara Valley Urban Runoff Pollution Prevention Program http://www.scvurppp.org

The Storm Water Managers Resource Center http://www.stormwatercenter.net

United States Environmental Protection Agency (USEPA). 2002. Pollution Prevention/Good Housekeeping for Municipal Operations Storm Drain System Cleaning. On line:
http://www.epa.gov/npdes/menuofbmps/poll_16.htm

Site Design & Landscape Planning SD-10

Design Objectives

- ☑ Maximize Infiltration
- ☑ Provide Retention
- ☑ Slow Runoff
- ☑ Minimize Impervious Land Coverage
- Prohibit Dumping of Improper Materials
- Contain Pollutants
- Collect and Convey

Description

Each project site possesses unique topographic, hydrologic, and vegetative features, some of which are more suitable for development than others. Integrating and incorporating appropriate landscape planning methodologies into the project design is the most effective action that can be done to minimize surface and groundwater contamination from stormwater.

Approach

Landscape planning should couple consideration of land suitability for urban uses with consideration of community goals and projected growth. Project plan designs should conserve natural areas to the extent possible, maximize natural water storage and infiltration opportunities, and protect slopes and channels.

Suitable Applications

Appropriate applications include residential, commercial and industrial areas planned for development or redevelopment.

Design Considerations

Design requirements for site design and landscapes planning should conform to applicable standards and specifications of agencies with jurisdiction and be consistent with applicable General Plan and Local Area Plan policies.

Designing New Installations

Begin the development of a plan for the landscape unit with attention to the following general principles:

- Formulate the plan on the basis of clearly articulated community goals. Carefully identify conflicts and choices between retaining and protecting desired resources and community growth.
- Map and assess land suitability for urban uses. Include the following landscape features in the assessment: wooded land, open unwooded land, steep slopes, erosion-prone soils, foundation suitability, soil suitability for waste disposal, aquifers, aquifer recharge areas, wetlands, floodplains, surface waters, agricultural lands, and various categories of urban land use. When appropriate, the assessment can highlight outstanding local or regional resources that the community determines should be protected (e.g., a scenic area, recreational area, threatened species habitat, farmland, fish run). Mapping and assessment should recognize not only these resources but also additional areas needed for their sustenance.

Project plan designs should conserve natural areas to the extent possible, maximize natural water storage and infiltration opportunities, and protect slopes and channels.

Conserve Natural Areas during Landscape Planning

If applicable, the following items are required and must be implemented in the site layout during the subdivision design and approval process, consistent with applicable General Plan and Local Area Plan policies:

- Cluster development on least-sensitive portions of a site while leaving the remaining land in a natural undisturbed condition.
- Limit clearing and grading of native vegetation at a site to the minimum amount needed to build lots, allow access, and provide fire protection.
- Maximize trees and other vegetation at each site by planting additional vegetation, clustering tree areas, and promoting the use of native and/or drought tolerant plants.
- Promote natural vegetation by using parking lot islands and other landscaped areas.
- Preserve riparian areas and wetlands.

Maximize Natural Water Storage and Infiltration Opportunities Within the Landscape Unit

- Promote the conservation of forest cover. Building on land that is already deforested affects basin hydrology to a lesser extent than converting forested land. Loss of forest cover reduces interception storage, detention in the organic forest floor layer, and water losses by evapotranspiration, resulting in large peak runoff increases and either their negative effects or the expense of countering them with structural solutions.
- Maintain natural storage reservoirs and drainage corridors, including depressions, areas of permeable soils, swales, and intermittent streams. Develop and implement policies and

regulations to discourage the clearing, filling, and channelization of these features. Utilize them in drainage networks in preference to pipes, culverts, and engineered ditches.

- Evaluating infiltration opportunities by referring to the stormwater management manual for the jurisdiction and pay particular attention to the selection criteria for avoiding groundwater contamination, poor soils, and hydrogeological conditions that cause these facilities to fail. If necessary, locate developments with large amounts of impervious surfaces or a potential to produce relatively contaminated runoff away from groundwater recharge areas.

Protection of Slopes and Channels during Landscape Design

- Convey runoff safely from the tops of slopes.
- Avoid disturbing steep or unstable slopes.
- Avoid disturbing natural channels.
- Stabilize disturbed slopes as quickly as possible.
- Vegetate slopes with native or drought tolerant vegetation.
- Control and treat flows in landscaping and/or other controls prior to reaching existing natural drainage systems.
- Stabilize temporary and permanent channel crossings as quickly as possible, and ensure that increases in run-off velocity and frequency caused by the project do not erode the channel.
- Install energy dissipaters, such as riprap, at the outlets of new storm drains, culverts, conduits, or channels that enter unlined channels in accordance with applicable specifications to minimize erosion. Energy dissipaters shall be installed in such a way as to minimize impacts to receiving waters.
- Line on-site conveyance channels where appropriate, to reduce erosion caused by increased flow velocity due to increases in tributary impervious area. The first choice for linings should be grass or some other vegetative surface, since these materials not only reduce runoff velocities, but also provide water quality benefits from filtration and infiltration. If velocities in the channel are high enough to erode grass or other vegetative linings, riprap, concrete, soil cement, or geo-grid stabilization are other alternatives.
- Consider other design principles that are comparable and equally effective.

Redeveloping Existing Installations

Various jurisdictional stormwater management and mitigation plans (SUSMP, WQMP, etc.) define “redevelopment” in terms of amounts of additional impervious area, increases in gross floor area and/or exterior construction, and land disturbing activities with structural or impervious surfaces. The definition of “ redevelopment” must be consulted to determine whether or not the requirements for new development apply to areas intended for redevelopment. If the definition applies, the steps outlined under “designing new installations” above should be followed.

Redevelopment may present significant opportunity to add features which had not previously been implemented. Examples include incorporation of depressions, areas of permeable soils, and swales in newly redeveloped areas. While some site constraints may exist due to the status of already existing infrastructure, opportunities should not be missed to maximize infiltration, slow runoff, reduce impervious areas, disconnect directly connected impervious areas.

Other Resources

A Manual for the Standard Urban Stormwater Mitigation Plan (SUSMP), Los Angeles County Department of Public Works, May 2002.

Stormwater Management Manual for Western Washington, Washington State Department of Ecology, August 2001.

Model Standard Urban Storm Water Mitigation Plan (SUSMP) for San Diego County, Port of San Diego, and Cities in San Diego County, February 14, 2002.

Model Water Quality Management Plan (WQMP) for County of Orange, Orange County Flood Control District, and the Incorporated Cities of Orange County, Draft February 2003.

Ventura Countywide Technical Guidance Manual for Stormwater Quality Control Measures, July 2002.

Roof Runoff Controls SD-11

Rain Garden

Design Objectives

- ☑ Maximize Infiltration
- ☑ Provide Retention
- ☑ Slow Runoff
- Minimize Impervious Land Coverage
- Prohibit Dumping of Improper Materials
- ☑ Contain Pollutants
- Collect and Convey

Description

Various roof runoff controls are available to address stormwater that drains off rooftops. The objective is to reduce the total volume and rate of runoff from individual lots, and retain the pollutants on site that may be picked up from roofing materials and atmospheric deposition. Roof runoff controls consist of directing the roof runoff away from paved areas and mitigating flow to the storm drain system through one of several general approaches: cisterns or rain barrels; dry wells or infiltration trenches; pop-up emitters, and foundation planting. The first three approaches require the roof runoff to be contained in a gutter and downspout system. Foundation planting provides a vegetated strip under the drip line of the roof.

Approach

Design of individual lots for single-family homes as well as lots for higher density residential and commercial structures should consider site design provisions for containing and infiltrating roof runoff or directing roof runoff to vegetative swales or buffer areas. Retained water can be reused for watering gardens, lawns, and trees. Benefits to the environment include reduced demand for potable water used for irrigation, improved stormwater quality, increased groundwater recharge, decreased runoff volume and peak flows, and decreased flooding potential.

Suitable Applications

Appropriate applications include residential, commercial and industrial areas planned for development or redevelopment.

Design Considerations

Designing New Installations

Cisterns or Rain Barrels

One method of addressing roof runoff is to direct roof downspouts to cisterns or rain barrels. A cistern is an above ground storage vessel with either a manually operated valve or a permanently open outlet. Roof runoff is temporarily stored and then released for irrigation or infiltration between storms. The number of rain

barrels needed is a function of the rooftop area. Some low impact developers recommend that every house have at least 2 rain barrels, with a minimum storage capacity of 1000 liters. Roof barrels serve several purposes including mitigating the first flush from the roof which has a high volume, amount of contaminants, and thermal load. Several types of rain barrels are commercially available. Consideration must be given to selecting rain barrels that are vector proof and childproof. In addition, some barrels are designed with a bypass valve that filters out grit and other contaminants and routes overflow to a soak-away pit or rain garden.

If the cistern has an operable valve, the valve can be closed to store stormwater for irrigation or infiltration between storms. This system requires continual monitoring by the resident or grounds crews, but provides greater flexibility in water storage and metering. If a cistern is provided with an operable valve and water is stored inside for long periods, the cistern must be covered to prevent mosquitoes from breeding.

A cistern system with a permanently open outlet can also provide for metering stormwater runoff. If the cistern outlet is significantly smaller than the size of the downspout inlet (say ¼ to ½ inch diameter), runoff will build up inside the cistern during storms, and will empty out slowly after peak intensities subside. This is a feasible way to mitigate the peak flow increases caused by rooftop impervious land coverage, especially for the frequent, small storms.

Dry wells and Infiltration Trenches

Roof downspouts can be directed to dry wells or infiltration trenches. A dry well is constructed by excavating a hole in the ground and filling it with an open graded aggregate, and allowing the water to fill the dry well and infiltrate after the storm event. An underground connection from the downspout conveys water into the dry well, allowing it to be stored in the voids. To minimize sedimentation from lateral soil movement, the sides and top of the stone storage matrix can be wrapped in a permeable filter fabric, though the bottom may remain open. A perforated observation pipe can be inserted vertically into the dry well to allow for inspection and maintenance.

In practice, dry wells receiving runoff from single roof downspouts have been successful over long periods because they contain very little sediment. They must be sized according to the amount of rooftop runoff received, but are typically 4 to 5 feet square, and 2 to 3 feet deep, with a minimum of 1-foot soil cover over the top (maximum depth of 10 feet).

To protect the foundation, dry wells must be set away from the building at least 10 feet. They must be installed in solids that accommodate infiltration. In poorly drained soils, dry wells have very limited feasibility.

Infiltration trenches function in a similar manner and would be particularly effective for larger roof areas. An infiltration trench is a long, narrow, rock-filled trench with no outlet that receives stormwater runoff. These are described under Treatment Controls.

Pop-up Drainage Emitter

Roof downspouts can be directed to an underground pipe that daylights some distance from the building foundation, releasing the roof runoff through a pop-up emitter. Similar to a pop-up irrigation head, the emitter only opens when there is flow from the roof. The emitter remains flush to the ground during dry periods, for ease of lawn or landscape maintenance.

Foundation Planting

Landscape planting can be provided around the base to allow increased opportunities for stormwater infiltration and protect the soil from erosion caused by concentrated sheet flow coming off the roof. Foundation plantings can reduce the physical impact of water on the soil and provide a subsurface matrix of roots that encourage infiltration. These plantings must be sturdy enough to tolerate the heavy runoff sheet flows, and periodic soil saturation.

Redeveloping Existing Installations

Various jurisdictional stormwater management and mitigation plans (SUSMP, WQMP, etc.) define "redevelopment" in terms of amounts of additional impervious area, increases in gross floor area and/or exterior construction, and land disturbing activities with structural or impervious surfaces. The definition of " redevelopment" must be consulted to determine whether or not the requirements for new development apply to areas intended for redevelopment. If the definition applies, the steps outlined under "designing new installations" above should be followed.

Supplemental Information

Examples

- City of Ottawa's Water Links Surface –Water Quality Protection Program
- City of Toronto Downspout Disconnection Program
- City of Boston, MA, Rain Barrel Demonstration Program

Other Resources

Hager, Marty Catherine, Stormwater, "Low-Impact Development", January/February 2003. www.stormh2o.com

Low Impact Urban Design Tools, Low Impact Development Design Center, Beltsville, MD. www.lid-stormwater.net

Start at the Source, Bay Area Stormwater Management Agencies Association, 1999 Edition

Efficient Irrigation SD-12

Design Objectives

- ☑ Maximize Infiltration
- ☑ Provide Retention
- ☑ Slow Runoff
- Minimize Impervious Land Coverage
- Prohibit Dumping of Improper Materials
- Contain Pollutants
- Collect and Convey

Description

Irrigation water provided to landscaped areas may result in excess irrigation water being conveyed into stormwater drainage systems.

Approach

Project plan designs for development and redevelopment should include application methods of irrigation water that minimize runoff of excess irrigation water into the stormwater conveyance system.

Suitable Applications

Appropriate applications include residential, commercial and industrial areas planned for development or redevelopment. (Detached residential single-family homes are typically excluded from this requirement.)

Design Considerations

Designing New Installations

The following methods to reduce excessive irrigation runoff should be considered, and incorporated and implemented where determined applicable and feasible by the Permittee:

- Employ rain-triggered shutoff devices to prevent irrigation after precipitation.
- Design irrigation systems to each landscape area's specific water requirements.
- Include design featuring flow reducers or shutoff valves triggered by a pressure drop to control water loss in the event of broken sprinkler heads or lines.
- Implement landscape plans consistent with County or City water conservation resolutions, which may include provision of water sensors, programmable irrigation times (for short cycles), etc.

- Design timing and application methods of irrigation water to minimize the runoff of excess irrigation water into the storm water drainage system.
- Group plants with similar water requirements in order to reduce excess irrigation runoff and promote surface filtration. Choose plants with low irrigation requirements (for example, native or drought tolerant species). Consider design features such as:
  - Using mulches (such as wood chips or bar) in planter areas without ground cover to minimize sediment in runoff
  - Installing appropriate plant materials for the location, in accordance with amount of sunlight and climate, and use native plant materials where possible and/or as recommended by the landscape architect
  - Leaving a vegetative barrier along the property boundary and interior watercourses, to act as a pollutant filter, where appropriate and feasible
  - Choosing plants that minimize or eliminate the use of fertilizer or pesticides to sustain growth
- Employ other comparable, equally effective methods to reduce irrigation water runoff.

Redeveloping Existing Installations

Various jurisdictional stormwater management and mitigation plans (SUSMP, WQMP, etc.) define "redevelopment" in terms of amounts of additional impervious area, increases in gross floor area and/or exterior construction, and land disturbing activities with structural or impervious surfaces. The definition of " redevelopment" must be consulted to determine whether or not the requirements for new development apply to areas intended for redevelopment. If the definition applies, the steps outlined under "designing new installations" above should be followed.

Other Resources

A Manual for the Standard Urban Stormwater Mitigation Plan (SUSMP), Los Angeles County Department of Public Works, May 2002.

Model Standard Urban Storm Water Mitigation Plan (SUSMP) for San Diego County, Port of San Diego, and Cities in San Diego County, February 14, 2002.

Model Water Quality Management Plan (WQMP) for County of Orange, Orange County Flood Control District, and the Incorporated Cities of Orange County, Draft February 2003.

Ventura Countywide Technical Guidance Manual for Stormwater Quality Control Measures, July 2002.

Storm Drain Signage SD-13

Design Objectives

- Maximize Infiltration
- Provide Retention
- Slow Runoff
- Minimize Impervious Land Coverage
- ☑ Prohibit Dumping of Improper Materials
- Contain Pollutants
- Collect and Convey

Description

Waste materials dumped into storm drain inlets can have severe impacts on receiving and ground waters. Posting notices regarding discharge prohibitions at storm drain inlets can prevent waste dumping. Storm drain signs and stencils are highly visible source controls that are typically placed directly adjacent to storm drain inlets.

Approach

The stencil or affixed sign contains a brief statement that prohibits dumping of improper materials into the urban runoff conveyance system. Storm drain messages have become a popular method of alerting the public about the effects of and the prohibitions against waste disposal.

Suitable Applications

Stencils and signs alert the public to the destination of pollutants discharged to the storm drain. Signs are appropriate in residential, commercial, and industrial areas, as well as any other area where contributions or dumping to storm drains is likely.

Design Considerations

Storm drain message markers or placards are recommended at all storm drain inlets within the boundary of a development project. The marker should be placed in clear sight facing toward anyone approaching the inlet from either side. All storm drain inlet locations should be identified on the development site map.

Designing New Installations

The following methods should be considered for inclusion in the project design and show on project plans:

- Provide stenciling or labeling of all storm drain inlets and catch basins, constructed or modified, within the project area with prohibitive language. Examples include "NO DUMPING

– DRAINS TO OCEAN" and/or other graphical icons to discourage illegal dumping.

- Post signs with prohibitive language and/or graphical icons, which prohibit illegal dumping at public access points along channels and creeks within the project area.

Note - Some local agencies have approved specific signage and/or storm drain message placards for use. Consult local agency stormwater staff to determine specific requirements for placard types and methods of application.

Redeveloping Existing Installations

Various jurisdictional stormwater management and mitigation plans (SUSMP, WQMP, etc.) define "redevelopment" in terms of amounts of additional impervious area, increases in gross floor area and/or exterior construction, and land disturbing activities with structural or impervious surfaces. If the project meets the definition of "redevelopment", then the requirements stated under " designing new installations" above should be included in all project design plans.

Additional Information

Maintenance Considerations

- Legibility of markers and signs should be maintained. If required by the agency with jurisdiction over the project, the owner/operator or homeowner's association should enter into a maintenance agreement with the agency or record a deed restriction upon the property title to maintain the legibility of placards or signs.

Placement

- Signage on top of curbs tends to weather and fade.

- Signage on face of curbs tends to be worn by contact with vehicle tires and sweeper brooms.

Supplemental Information

Examples

- Most MS4 programs have storm drain signage programs. Some MS4 programs will provide stencils, or arrange for volunteers to stencil storm drains as part of their outreach program.

Other Resources

A Manual for the Standard Urban Stormwater Mitigation Plan (SUSMP), Los Angeles County Department of Public Works, May 2002.

Model Standard Urban Storm Water Mitigation Plan (SUSMP) for San Diego County, Port of San Diego, and Cities in San Diego County, February 14, 2002.

Model Water Quality Management Plan (WQMP) for County of Orange, Orange County Flood Control District, and the Incorporated Cities of Orange County, Draft February 2003.

Ventura Countywide Technical Guidance Manual for Stormwater Quality Control Measures, July 2002.

Trash Storage Areas SD-32

Design Objectives

- Maximize Infiltration
- Provide Retention
- Slow Runoff
- Minimize Impervious Land Coverage
- Prohibit Dumping of Improper Materials
- ☑ Contain Pollutants
- Collect and Convey

Description

Trash storage areas are areas where a trash receptacle (s) are located for use as a repository for solid wastes. Stormwater runoff from areas where trash is stored or disposed of can be polluted. In addition, loose trash and debris can be easily transported by water or wind into nearby storm drain inlets, channels, and/or creeks. Waste handling operations that may be sources of stormwater pollution include dumpsters, litter control, and waste piles.

Approach

This fact sheet contains details on the specific measures required to prevent or reduce pollutants in stormwater runoff associated with trash storage and handling. Preventative measures including enclosures, containment structures, and impervious pavements to mitigate spills, should be used to reduce the likelihood of contamination.

Suitable Applications

Appropriate applications include residential, commercial and industrial areas planned for development or redevelopment. (Detached residential single-family homes are typically excluded from this requirement.)

Design Considerations

Design requirements for waste handling areas are governed by Building and Fire Codes, and by current local agency ordinances and zoning requirements. The design criteria described in this fact sheet are meant to enhance and be consistent with these code and ordinance requirements. Hazardous waste should be handled in accordance with legal requirements established in Title 22, California Code of Regulation.

Wastes from commercial and industrial sites are typically hauled by either public or commercial carriers that may have design or access requirements for waste storage areas. The design criteria in this fact sheet are recommendations and are not intended to be in conflict with requirements established by the waste hauler. The waste hauler should be contacted prior to the design of your site trash collection areas. Conflicts or issues should be discussed with the local agency.

Designing New Installations

Trash storage areas should be designed to consider the following structural or treatment control BMPs:

- Design trash container areas so that drainage from adjoining roofs and pavement is diverted around the area(s) to avoid run-on. This might include berming or grading the waste handling area to prevent run-on of stormwater.
- Make sure trash container areas are screened or walled to prevent off-site transport of trash.

- Use lined bins or dumpsters to reduce leaking of liquid waste.
- Provide roofs, awnings, or attached lids on all trash containers to minimize direct precipitation and prevent rainfall from entering containers.
- Pave trash storage areas with an impervious surface to mitigate spills.
- Do not locate storm drains in immediate vicinity of the trash storage area.
- Post signs on all dumpsters informing users that hazardous materials are not to be disposed of therein.

Redeveloping Existing Installations

Various jurisdictional stormwater management and mitigation plans (SUSMP, WQMP, etc.) define "redevelopment" in terms of amounts of additional impervious area, increases in gross floor area and/or exterior construction, and land disturbing activities with structural or impervious surfaces. The definition of " redevelopment" must be consulted to determine whether or not the requirements for new development apply to areas intended for redevelopment. If the definition applies, the steps outlined under "designing new installations" above should be followed.

Additional Information

Maintenance Considerations

The integrity of structural elements that are subject to damage (i.e., screens, covers, and signs) must be maintained by the owner/operator. Maintenance agreements between the local agency and the owner/operator may be required. Some agencies will require maintenance deed restrictions to be recorded of the property title. If required by the local agency, maintenance agreements or deed restrictions must be executed by the owner/operator before improvement plans are approved.

Other Resources

A Manual for the Standard Urban Stormwater Mitigation Plan (SUSMP), Los Angeles County Department of Public Works, May 2002.

Model Standard Urban Storm Water Mitigation Plan (SUSMP) for San Diego County, Port of San Diego, and Cities in San Diego County, February 14, 2002.

Model Water Quality Management Plan (WQMP) for County of Orange, Orange County Flood Control District, and the Incorporated Cities of Orange County, Draft February 2003.

Ventura Countywide Technical Guidance Manual for Stormwater Quality Control Measures, July 2002.

MODULAR WETLANDS™

*Advanced **Stormwater** Biofiltration*

MWS Linear

Contents

1 Introduction

2 Applications

3 Configurations

4 Advantages

5 Operation

6 Orientations | Bypass

7 Performance | Approvals

8 Sizing

9 Installation | Maintenance | Plants

The Urban Impact

For hundreds of years natural wetlands surrounding our shores have played an integral role as nature's stormwater treatment system. But as our cities grow and develop, these natural wetlands have perished under countless roads, rooftops, and parking lots.

Plant A Wetland

Without natural wetlands our cities are deprived of water purification, flood control, and land stability. Modular Wetlands and the MWS Linear re-establish nature's presence and rejuvenate water ways in urban areas.

MWS Linear

The Modular Wetland System Linear represents a pioneering breakthrough in stormwater technology as the only biofiltration system to utilize patented horizontal flow, allowing for a smaller footprint and higher treatment capacity. While most biofilters use little or no pre-treatment, the MWS Linear incorporates an advanced pre-treatment chamber that includes separation and pre-filter cartridges. In this chamber sediment and hydrocarbons are removed from runoff before it enters the biofiltration chamber, in turn reducing maintenance costs and improving performance.

Applications

The MWS Linear has been successfully used on numerous new construction and retrofit projects. The system's superior versatility makes it beneficial for a wide range of stormwater and waste water applications - treating rooftops, streetscapes, parking lots, and industrial sites.

Industrial

Many states enforce strict regulations for discharges from industrial sites. The MWS Linear has helped various sites meet difficult EPA mandated effluent limits for dissolved metals and other pollutants.

Residential

Low to high density developments can benefit from the versatile design of the MWS Linear. The system can be used in both decentralized LID design and cost-effective end-of-the-line configurations.

Streets

Street applications can be challenging due to limited space. The MWS Linear is very adaptable, and offers the smallest footprint to work around the constraints of existing utilities on retrofit projects.

Parking Lots

Parking lots are designed to maximize space and the MWS Linear's 4 ft. standard planter width allows for easy integration into parking lot islands and other landscape medians.

Commercial

Compared to bioretention systems, the MWS Linear can treat far more area in less space - meeting treatment and volume control requirements.

Mixed Use

The MWS Linear can be installed as a raised planter to treat runoff from rooftops or patios, making it perfect for sustainable "live-work" spaces.

More applications are available on our website: www.ModularWetlands.com/Applications

- Agriculture
- Reuse
- Low Impact Development
- Waste Water

Configurations

The MWS Linear is the preferred biofiltration system of Civil Engineers across the country due to its versatile design. This highly versatile system has available "pipe-in" options on most models, along with built-in curb or grated inlets for simple integration into your stormdrain design.

Curb Type

The *Curb Type* configuration accepts sheet flow through a curb opening and is commonly used along road ways and parking lots. It can be used in sump or flow by conditions. Length of curb opening varies based on model and size.

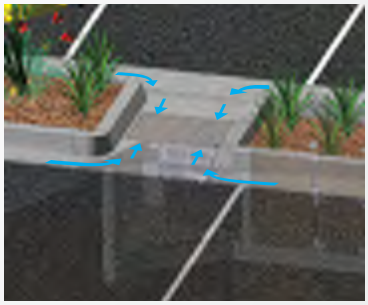

Grate Type

The *Grate Type* configuration offers the same features and benefits as the *Curb Type* but with a grated/drop inlet above the systems pre-treatment chamber. It has the added benefit of allowing for pedestrian access over the inlet. ADA compliant grates are available to assure easy and safe access. The *Grate Type* can also be used in scenarios where runoff needs to be intercepted on both sides of landscape islands.

Vault Type

The system's patented horizontal flow biofilter is able to accept inflow pipes directly into the pre-treatment chamber, meaning the MWS Linear can be used in end-of-the-line installations. This greatly improves feasibility over typical decentralized designs that are required with other biofiltration/bioretention systems. Another benefit of the "pipe in" design is the ability to install the system downstream of underground detention systems to meet water quality volume requirements.

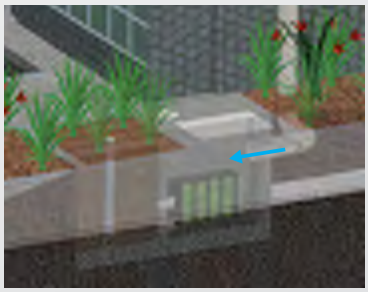

Downspout Type

The *Downspout Type* is a variation of the *Vault Type* and is designed to accept a vertical downspout pipe from roof top and podium areas. Some models have the option of utilizing an internal bypass, simplifying the overall design. The system can be installed as a raised planter and the exterior can be stuccoed or covered with other finishes to match the look of adjacent buildings.

Advantages & Operation

The MWS Linear is the most efficient and versatile biofiltration system on the market, and the only system with horizontal flow which improves performance, reduces footprint, and minimizes maintenance. Figure-1 and Figure-2 illustrate the invaluable benefits of horizontal flow and the multiple treatment stages.

Featured Advantages

- Horizontal Flow Biofiltration
- Greater Filter Surface Area
- Pre-Treatment Chamber
- Patented Perimeter Void Area
- Flow Control
- No Depressed Planter Area

1 Pre-Treatment

Separation

- Trash, sediment, and debris are separated before entering the pre-filter cartridges
- Designed for easy maintenance access

Pre-Filter Cartridges

- Over 25 ft^2 of surface area per cartridge
- Utilizes BioMediaGREEN filter material
- Removes over 80% of TSS & 90% of hydrocarbons
- Prevents pollutants that cause clogging from migrating to the biofiltration chamber

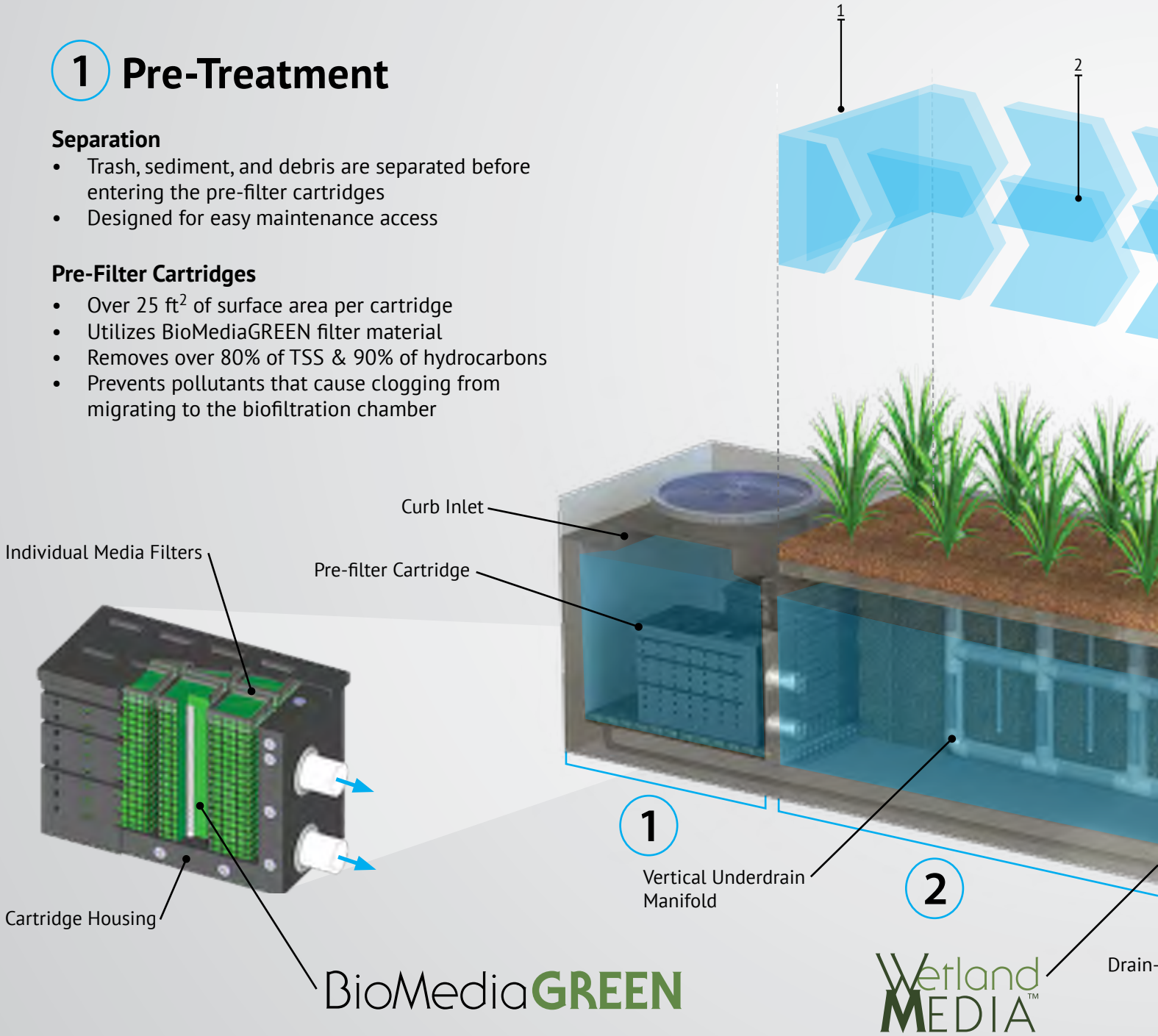

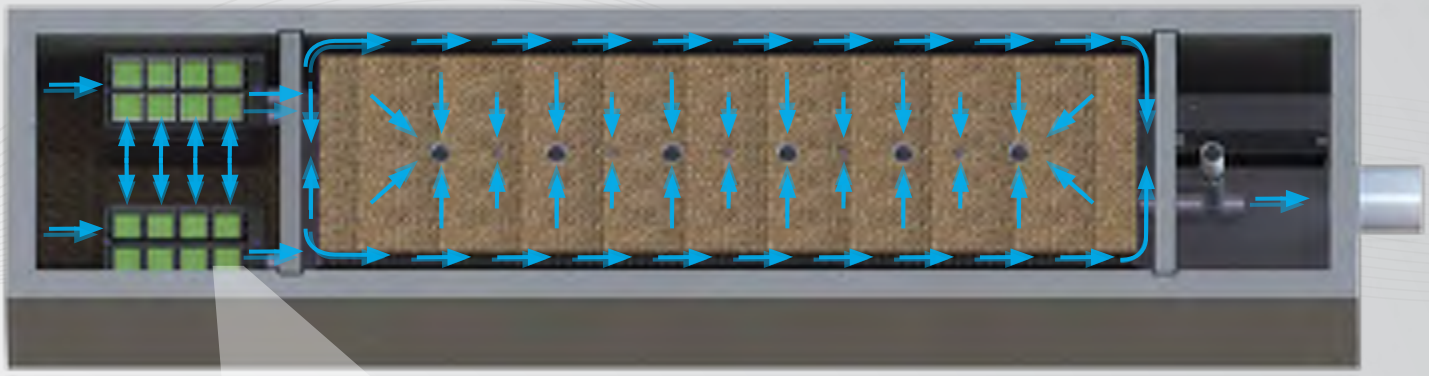

Fig. 2 - Top View

2x to 3x More Surface Area Than Traditional Downward Flow Bioretention Systems.

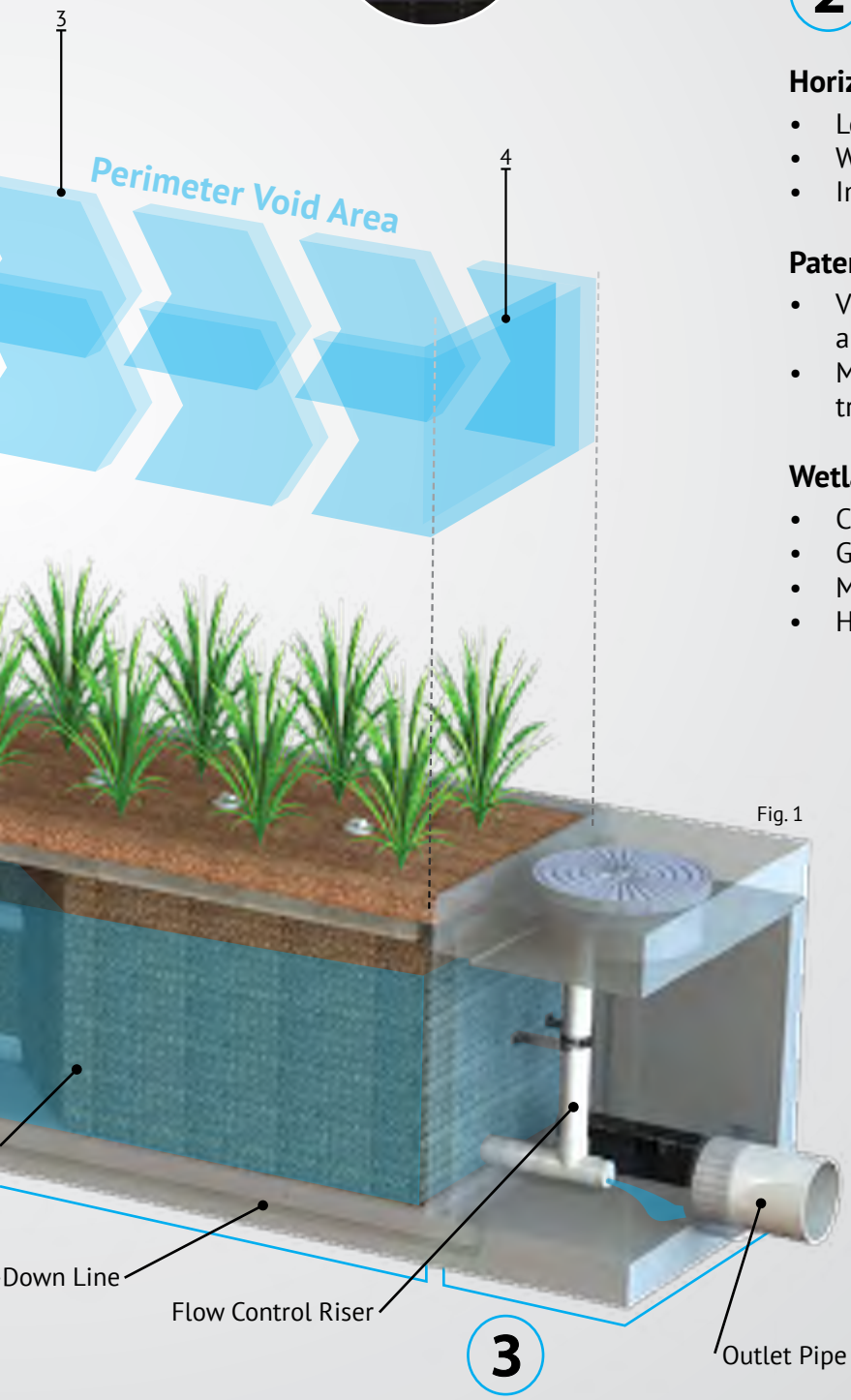

Fig. 1

2 Biofiltration

Horizontal Flow

- Less clogging than downward flow biofilters
- Water flow is subsurface
- Improves biological filtration

Patented Perimeter Void Area

- Vertically extends void area between the walls and the WetlandMEDIA on all four sides.
- Maximizes surface area of the media for higher treatment capacity

WetlandMEDIA

- Contains no organics and removes phosphorus
- Greater surface area and 48% void space
- Maximum evapotranspiration
- High ion exchange capacity and light weight

3 Discharge

Flow Control

- Orifice plate controls flow of water through WetlandMEDIA to a level lower than the media's capacity.
- Extends the life of the media and improves performance

Drain-Down Filter

- The Drain-Down is an optional feature that completely drains the pre-treatment chamber
- Water that drains from the pre-treatment chamber between storm events will be treated

Orientations

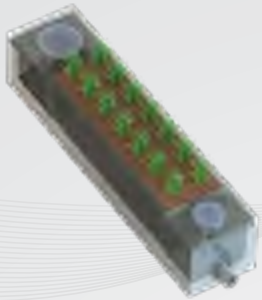

Side-By-Side

The *Side-By-Side* orientation places the pre-treatment and discharge chamber adjacent to one another with the biofiltration chamber running parallel on either side. This minimizes the system length, providing a highly compact footprint. It has been proven useful in situations such as streets with directly adjacent sidewalks, as half of the system can be placed under that sidewalk. This orientation also offers internal bypass options as discussed below.

End-To-End

The *End-To-End* orientation places the pre-treatment and discharge chambers on opposite ends of the biofiltration chamber therefore minimizing the width of the system to 5 ft (outside dimension). This orientation is perfect for linear projects and street retrofits where existing utilities and sidewalks limit the amount of space available for installation. One limitation of this orientation is bypass must be external.

Bypass

Internal Bypass Weir (Side-by-Side Only)

The *Side-By-Side* orientation places the pre-treatment and discharge chambers adjacent to one another allowing for integration of internal bypass. The wall between these chambers can act as a bypass weir when flows exceed the system's treatment capacity, thus allowing bypass from the pre-treatment chamber directly to the discharge chamber.

External Diversion Weir Structure

This traditional offline diversion method can be used with the MWS Linear in scenarios where runoff is being piped to the system. These simple and effective structures are generally configured with two outflow pipes. The first is a smaller pipe on the upstream side of the diversion weir - to divert low flows over to the MWS Linear for treatment. The second is the main pipe that receives water once the system has exceeded treatment capacity and water flows over the weir.

Flow By Design

This method is one in which the system is placed just upstream of a standard curb or grate inlet to intercept the first flush. Higher flows simply pass by the MWS Linear and into the standard inlet downstream.

DVERT Low Flow Diversion

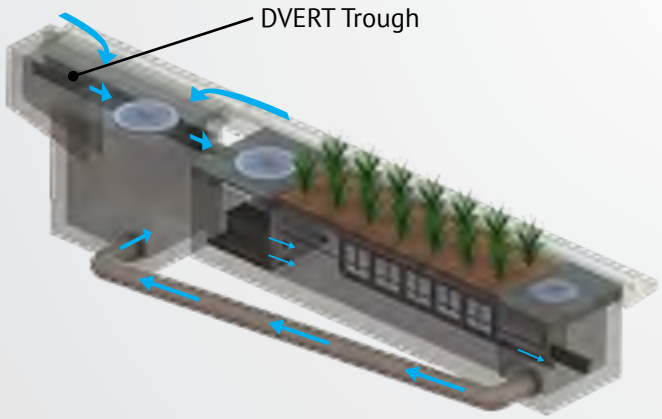

This simple yet innovative diversion trough can be installed in existing or new curb and grate inlets to divert the first flush to the MWS Linear via pipe. It works similar to a rain gutter and is installed just below the opening into the inlet. It captures the low flows and channels them over to a connecting pipe exiting out the wall of the inlet and leading to the MWS Linear. The DVERT is perfect for retrofit and green street applications that allows the MWS Linear to be installed anywhere space is available.

Performance

The MWS Linear continues to outperform other treatment methods with superior pollutant removal for TSS, heavy metals, nutrients, hydrocarbons and bacteria. Since 2007 the MWS Linear has been field tested on numerous sites across the country. With it's advanced pre-treatment chamber and innovative horizontal flow biofilter, the system is able to effectively remove pollutants through a combination of physical, chemical, and biological filtration processes. With the same biological processes found in natural wetlands, the MWS Linear harnesses natures ability to process, transform, and remove even the most harmful pollutants.

Approvals

The MWS Linear has successfully met years of challenging technical reviews and testing from some of the most prestigious and demanding agencies in the nation, and perhaps the world.

Washington State DOE Approved

The MWS Linear is approved for General Use Level Designation (GULD) for Basic, Enhanced, and Phosphorus treatment at 1 gpm/ft^2 loading rate. The highest performing BMP on the market for all main pollutant categories.

TSS	Total Phosphorus	Ortho Phosphorus	Nitrogen	Dissolved Zinc	Dissolved Copper	Total Zinc	Total Copper	Motor Oil
85%	64%	67%	45%	66%	38%	69%	50%	95%

DEQ Assignment

The Virginia Department of Environmental Quality assigned the MWS Linear, the highest phosphorus removal rating for manufactured treatment devices to meet the new Virginia Stormwater Management Program (VSMP) Technical Criteria.

MASTEP Evaluation

The University of Massachusetts at Amherst – Water Resources Research Center, issued a technical evaluation report noting removal rates up to 84% TSS, 70% Total Phosphorus, 68.5% Total Zinc, and more.

Rhode Island DEM Approved

Approved as an authorized BMP and noted to achieve the following minimum removal efficiencies: 85% TSS, 60% Pathogens, 30% Total Phosphorus for discharges to freshwater systems, and 30% Total Nitrogen for discharges to saltwater or tidal systems.

Flow Based Sizing

The MWS Linear can be used in stand alone applications to meet treatment flow requirements. Since the MWS Linear is the only biofiltration system that can accept inflow pipes several feet below the surface it can be used not only in decentralized design applications but also as a large central end-of-the-line application for maximum feasibility.

Treatment Flow Sizing Table

Model #	Dimensions	WetlandMedia Surface Area	Treatment Flow Rate (cfs)
MWS-L-4-4	4' x 4'	23 ft^2	0.052
MWS-L-4-6	4' x 6'	32 ft^2	0.073
MWS-L-4-8	4' x 8'	50 ft^2	0.115
MWS-L-4-13	4' x 13'	63 ft^2	0.144
MWS-L-4-15	4' x 15'	76 ft^2	0.175
MWS-L-4-17	4' x 17'	90 ft^2	0.206
MWS-L-4-19	4' x 19'	103 ft^2	0.237
MWS-L-4-21	4' x 21'	117 ft^2	0.268
MWS-L-8-8	8' x 8'	100 ft^2	0.230
MWS-L-8-12	8' x 12'	151 ft^2	0.346
MWS-L-8-16	8' x 16'	201 ft^2	0.462

Volume Based Sizing

Many states require treatment of a water quality volume and do not offer the option of flow based design. The MWS Linear and its unique horizontal flow makes it the only biofilter that can be used in volume based design installed downstream of ponds, detention basins, and underground storage systems.

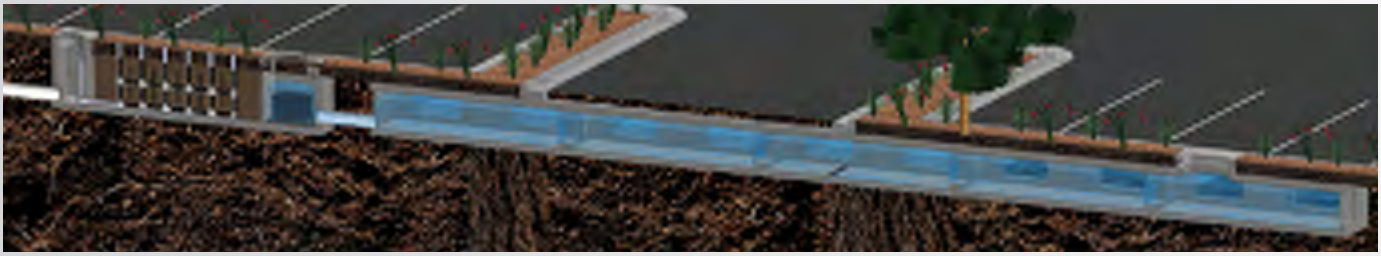

Treatment Volume Sizing Table

Model #	Treatment Capacity (cu. ft.) @ 24-Hour Drain Down	Treatment Capacity (cu. ft.) @ 48-Hour Drain Down
MWS-L-4-4	1140	2280
MWS-L-4-6	1600	3200
MWS-L-4-8	2518	5036
MWS-L-4-13	3131	6261
MWS-L-4-15	3811	7623
MWS-L-4-17	4492	8984
MWS-L-4-19	5172	10345
MWS-L-4-21	5853	11706
MWS-L-8-8	5036	10072
MWS-L-8-12	7554	15109
MWS-L-8-16	10073	20145

Installation

The MWS Linear is simple, easy to install, and has a space efficient design that offers lower excavation and installation costs compared to traditional tree-box type systems. The structure of the system resembles pre-cast catch basin or utility vaults and is installed in a similar fashion.

The system is delivered fully assembled for quick installation. Generally, the structure can be unloaded and set in place in 15 minutes. Our experienced team of field technicians are available to supervise installations and provide technical support.

Maintenance

Reduce your maintenance costs, man hours, and materials with the MWS Linear. Unlike other biofiltration systems that provide no pre-treatment, the MWS Linear is a self-contained treatment train which incorporates simple and effective pre-treatment.

Maintenance requirements for the biofilter itself are almost completely eliminated, as the pre-treatment chamber removes and isolates trash, sediments, and hydrocarbons. What's left is the simple maintenance of an easily accessible pre-treatment chamber that can be cleaned by hand or with a standard vac truck. Only periodic replacement of low-cost media in the pre-filter cartridges is required for long term operation and there is absolutely no need to replace expensive biofiltration media.

Plant Selection

Abundant plants, trees, and grasses bring value and an aesthetic benefit to any urban setting, but those in the MWS Linear do even more - they increase pollutant removal. What's not seen, but very important, is that below grade the stormwater runoff/flow is being subjected to nature's secret weapon: a dynamic physical, chemical, and biological process working to break down and remove non-point source pollutants. The flow rate is controlled in the MWS Linear, giving the plants more "contact time" so that pollutants are more successfully decomposed, volatilized and incorporated into the biomass of The MWS Linear's micro/macro flora and fauna.

A wide range of plants are suitable for use in the MWS Linear, but selections vary by location and climate. View suitable plants by selecting the list relative to your project location's hardy zone.

Please visit www.ModularWetlands.com/Plants for more information and various plant lists.

Maintenance Guidelines for Modular Wetland System - Linear

Maintenance Summary

- Remove Trash from Screening Device – average maintenance interval is 6 to 12 months.
  - (*5 minute average service time*).
- Remove Sediment from Separation Chamber – average maintenance interval is 12 to 24 months.
  - (*10 minute average service time*).
- Replace Cartridge Filter Media – average maintenance interval 12 to 24 months.
  - (*10-15 minute per cartridge average service time*).
- Replace Drain Down Filter Media – average maintenance interval is 12 to 24 months.
  - (*5 minute average service time*).
- Trim Vegetation – average maintenance interval is 6 to 12 months.
  - (*Service time varies*).

System Diagram

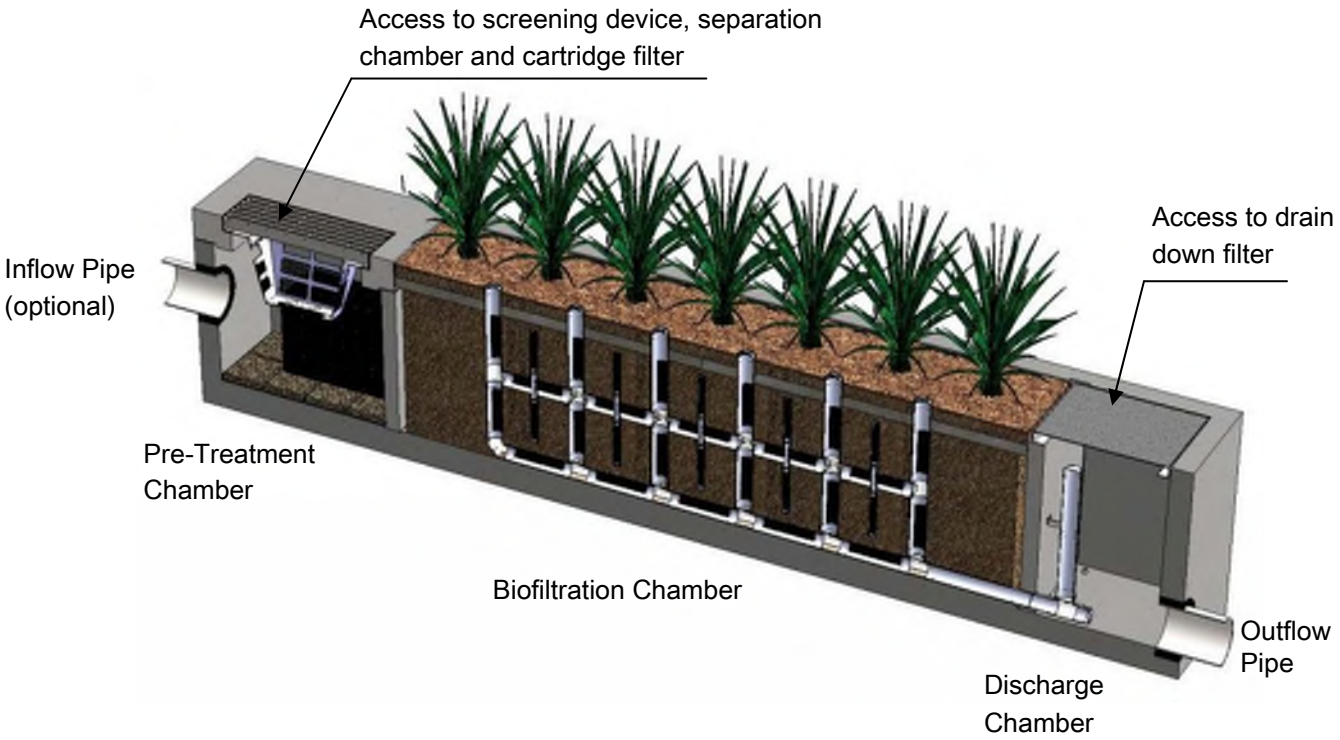

Maintenance Procedures

Screening Device

1. Remove grate or manhole cover to gain access to the screening device in the Pre-Treatment Chamber. Vault type units do not have screening device. Maintenance can be performed without entry.
2. Remove all pollutants collected by the screening device. Removal can be done manually or with the use of a vacuum truck. The hose of the vacuum truck will not damage the screening device.
3. Screening device can easily be removed from the Pre-Treatment Chamber to gain access to separation chamber and media filters below. Replace grate or manhole cover when completed.

Separation Chamber

1. Perform maintenance procedures of screening device listed above before maintaining the separation chamber.
2. With a pressure washer spray down pollutants accumulated on walls and cartridge filters.
3. Vacuum out Separation Chamber and remove all accumulated pollutants. Replace screening device, grate or manhole cover when completed.

Cartridge Filters

1. Perform maintenance procedures on screening device and separation chamber before maintaining cartridge filters.
2. Enter separation chamber.
3. Unscrew the two bolts holding the lid on each cartridge filter and remove lid.
4. Remove each of 4 to 8 media cages holding the media in place.
5. Spray down the cartridge filter to remove any accumulated pollutants.
6. Vacuum out old media and accumulated pollutants.
7. Reinstall media cages and fill with new media from manufacturer or outside supplier. Manufacturer will provide specification of media and sources to purchase.
8. Replace the lid and tighten down bolts. Replace screening device, grate or manhole cover when completed.

Drain Down Filter

1. Remove hatch or manhole cover over discharge chamber and enter chamber.
2. Unlock and lift drain down filter housing and remove old media block. Replace with new media block. Lower drain down filter housing and lock into place.
3. Exit chamber and replace hatch or manhole cover.

Maintenance Notes

1. Following maintenance and/or inspection, it is recommended the maintenance operator prepare a maintenance/inspection record. The record should include any maintenance activities performed, amount and description of debris collected, and condition of the system and its various filter mechanisms.

2. The owner should keep maintenance/inspection record(s) for a minimum of five years from the date of maintenance. These records should be made available to the governing municipality for inspection upon request at any time.

3. Transport all debris, trash, organics and sediments to approved facility for disposal in accordance with local and state requirements.

4. Entry into chambers may require confined space training based on state and local regulations.

5. No fertilizer shall be used in the Biofiltration Chamber.

6. Irrigation should be provided as recommended by manufacturer and/or landscape architect. Amount of irrigation required is dependent on plant species. Some plants may require irrigation.

Maintenance Procedure Illustration

Screening Device

The screening device is located directly under the manhole or grate over the Pre-Treatment Chamber. It's mounted directly underneath for easy access and cleaning. Device can be cleaned by hand or with a vacuum truck.

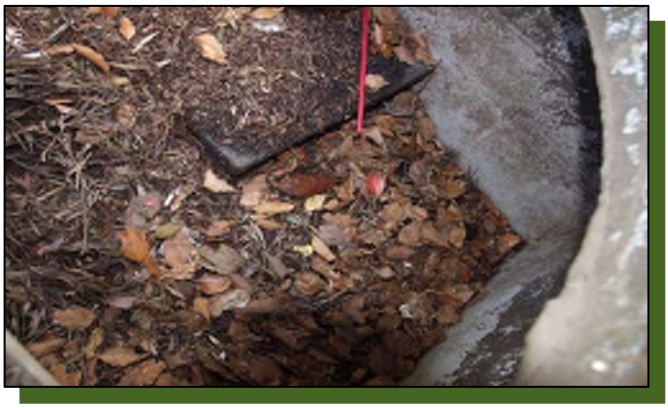

Separation Chamber

The separation chamber is located directly beneath the screening device. It can be quickly cleaned using a vacuum truck or by hand. A pressure washer is useful to assist in the cleaning process.

Cartridge Filters

The cartridge filters are located in the Pre-Treatment chamber connected to the wall adjacent to the biofiltration chamber. The cartridges have removable tops to access the individual media filters. Once the cartridge is open media can be easily removed and replaced by hand or a vacuum truck.

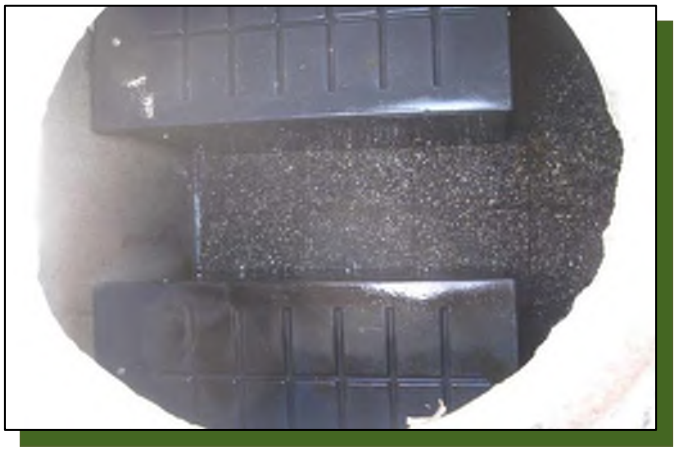

Drain Down Filter

The drain down filter is located in the Discharge Chamber. The drain filter unlocks from the wall mount and hinges up. Remove filter block and replace with new block.

Trim Vegetation

Vegetation should be maintained in the same manner as surrounding vegetation and trimmed as needed. No fertilizer shall be used on the plants. Irrigation per the recommendation of the manufacturer and or landscape architect. Different types of vegetation requires different amounts of irrigation.

Inspection Form

Modular Wetland System, Inc.
P. 760.433-7640
F. 760-433-3176
E. Info@modularwetlands.com

www.modularwetlands.com

Inspection Report
Modular Wetlands System

For Office Use Only
(Reviewed By)
(Date) Office personnel to complete section to the left.

Project Name _____

Project Address _____ (city) (Zip Code)

Owner / Management Company _____

Contact _____ Phone ( ) –

Inspector Name _____ Date ____/____/____ Time _____ AM / PM

Type of Inspection ☐ Routine ☐ Follow Up ☐ Complaint ☐ Storm Storm Event in Last 72-hours? ☐ No ☐ Yes

Weather Condition _____ Additional Notes _____

Inspection Checklist

Modular Wetland System Type (Curb, Grate or UG Vault): _____ Size (22', 14' or etc.): _____

Structural Integrity:	**Yes**	**No**	**Comments**
Damage to pre-treatment access cover (manhole cover/grate) or cannot be opened using normal lifting pressure?			
Damage to discharge chamber access cover (manhole cover/grate) or cannot be opened using normal lifting pressure?			
Does the MWS unit show signs of structural deterioration (cracks in the wall, damage to frame)?			
Is the inlet/outlet pipe or drain down pipe damaged or otherwise not functioning properly?			
Working Condition:			
Is there evidence of illicit discharge or excessive oil, grease, or other automobile fluids entering and clogging the unit?			
Is there standing water in inappropriate areas after a dry period?			
Is the filter insert (if applicable) at capacity and/or is there an accumulation of debris/trash on the shelf system?			
Does the depth of sediment/trash/debris suggest a blockage of the inflow pipe, bypass or cartridge filter? If yes, specify which one in the comments section. Note depth of accumulation in in pre-treatment chamber.			Depth:
Does the cartridge filter media need replacement in pre-treatment chamber and/or discharge chamber?			Chamber:
Any signs of improper functioning in the discharge chamber? Note issues in comments section.			
Other Inspection Items:			
Is there an accumulation of sediment/trash/debris in the wetland media (if applicable)?			
Is it evident that the plants are alive and healthy (if applicable)? Please note Plant Information below.			
Is there a septic or foul odor coming from inside the system?			

Waste:	**Yes**	**No**
Sediment / Silt / Clay		
Trash / Bags / Bottles		
Green Waste / Leaves / Foliage		

Recommended Maintenance	
No Cleaning Needed	
Schedule Maintenance as Planned	
Needs Immediate Maintenance	

Plant Information	
Damage to Plants	
Plant Replacement	
Plant Trimming	

Additional Notes:

2972 San Luis Rey Road, Oceanside, CA 92058 P (760) 433-7640 F (760) 433-3176

Maintenance Report

Modular Wetland System, Inc.
P. 760.433-7640
F. 760-433-3176
E. Info@modularwetlands.com

www.modularwetlands.com

Cleaning and Maintenance Report
Modular Wetlands System

Project Name _____

Project Address _____
(city) (Zip Code)

Owner / Management Company _____

Contact _____ Phone ( ) –

For Office Use Only
(Reviewed By)
(Date)
Office personnel to complete section to the left.

Inspector Name _____ Date ____/____/_____ Time _____ AM / PM

Type of Inspection ☐ Routine ☐ Follow Up ☐ Complaint ☐ Storm Storm Event in Last 72-hours? ☐ No ☐ Yes

Weather Condition _____ Additional Notes _____

Site Map #	GPS Coordinates of Insert	Manufacturer / Description / Sizing	Trash Accumulation	Foliage Accumulation	Sediment Accumulation	Total Debris Accumulation	Condition of Media 25/50/75/100 (will be changed @ 75%)	Operational Per Manufactures' Specifications (If not, why?)
	Lat: Long:	MWS Catch Basins						
		MWS Sedimentation Basin						
		Media Filter Condition						
		Plant Condition						
		Drain Down Media Condition						
		Discharge Chamber Condition						
		Drain Down Pipe Condition						
		Inlet and Outlet Pipe Condition						

Comments:

2972 San Luis Rey Road, Oceanside, CA 92058 P. 760.433.7640 F. 760.433.3176

TECHNICAL NOTE

Retention/Detention System Maintenance

TN 6.01
February 2007

This document is provided for informational purposes only and is meant only to be a guide. Individuals using this information should make their own decisions as to suitability of this guideline for their individual projects and adjust accordingly.

Introduction

A retention/detention system is comprised of a series of pipes and fittings that form an underground storage area, which retains or detains storm water runoff from a given area. As sediment and debris settle out of the detained stormwater, build up occurs that requires the system to be regularly inspected and cleaned in order for the system to perform as originally designed. The following provides the available fittings and guidelines for inspection and maintenance of an HDPE underground storage system.

System Accessories and Fittings

Concentric Reducers

Concentric Reducers are fittings that transition between two pipes, either in line with one another or at perpendicular angles. The centerlines of the two pipes are at the same elevation. When a concentric reducer is used to connect the manifold pipe to the lateral pipes, most debris will be trapped in the manifold pipe.

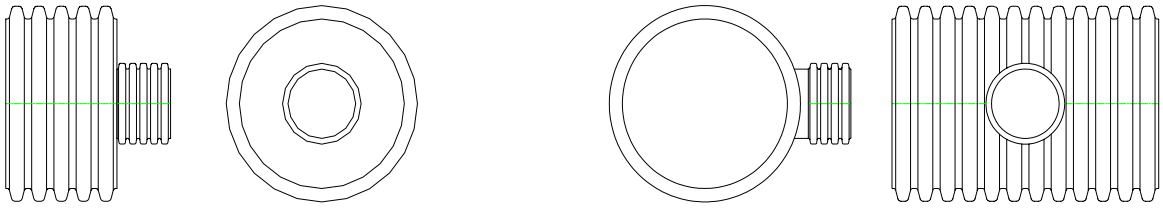

SIDE VIEW SECTION VIEW SIDE VIEW SECTION VIEW

Eccentric Reducers

Eccentric Reducers are fittings that transition between two pipes, either in line with one another or at perpendicular angles. The inverts of the two pipes are at the same elevations. When an eccentric reducer is used to connect the manifold pipe to the lateral pipes, most debris will follow the flow of the storm water into the lateral pipes.

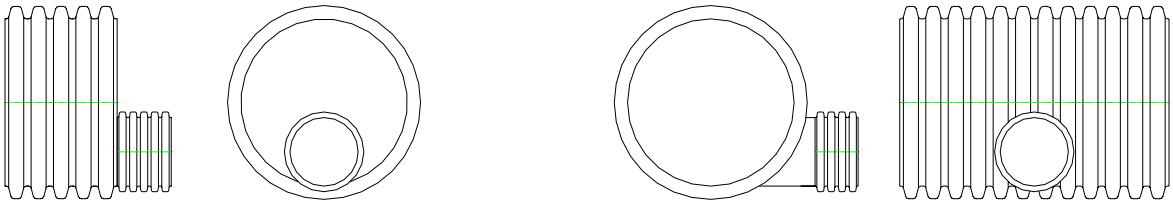

SIDE VIEW SECTION VIEW SIDE VIEW SECTION VIEW

©ADS 2007

Riser

Each retention/detention system typically has risers strategically placed for maintenance and inspection of the system. These risers are typically 24” in diameter or larger and are placed on the manifold fittings.

Cleanouts

Cleanout ports are usually 4-, 6-, or 8-in diameter pipe and are placed on the manifold fittings. They are used for entrance of a pipe from a vacuum truck or a water-jetting device.

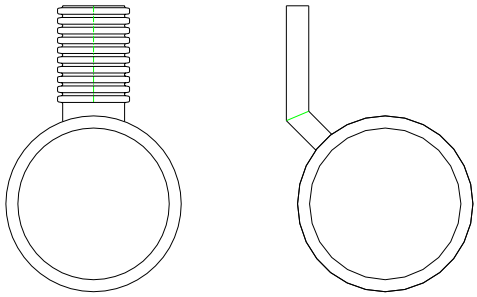

RISER
CROSS-SECTION VIEW

CLEANOUT
CROSS-SECTION VIEW

For a complete listing of available fittings and components please refer to the *ADS Fittings Manual*.

Maintenance Overview of a Retention/Detention System

Maintaining a clean and obstruction-free retention/detention system helps to ensure the system performs the intended function of the primary design. Build up of debris may obstruct flow through the laterals in a retention system or block the entranceway of the outlet pipe in a detention system. This may result in ineffective operation or complete failure of the system . Additionally, surrounding areas may potentially run the risk of damage due to flooding or other similar issues.

Inspection/Maintenance Frequency

All retention/detention systems must be cleaned and maintained. Underground systems may be maintained more cost effectively if these simple guidelines are followed. Inspection should be performed at a minimum of once per year. Cleaning should be done at the discretion of individuals responsible to maintain proper storage and flow. While maintenance can generally be performed year round, it should be scheduled during a relatively dry season.

Pre-Inspection

A post-installation inspection should be performed to allow the owner to measure the invert prior to accumulation of sediment. This survey will allow the monitoring of sediment build-up without requiring access to the retention/detention system.

The following is the recommended procedure for pre-inspections:

1) Locate the riser section or cleanouts of the retention/detention system. The riser will typically be 24” in diameter or larger and the cleanouts are usually 4”, 6” or 8” in diameter.
2) Remove the lid of the riser or clean outs.
3) Insert a measuring device into the opening and make note to a point of reference on the stick or string. (This is done so that sediment build up can be determined in the future without having to enter the system.)

Inspection/Maintenance

A retention/detention system should be inspected at a minimum of one time a year or after major rain events if necessary.

The following is the recommended procedure to inspect system in service:

1) Locate the riser section of the retention/detention system. The riser will typically be 24” in diameter or larger.
2) Remove the lid from the riser.
3) Measure the sediment buildup at each riser and cleanout location. Only certified confined space entry personnel having appropriate equipment should be permitted to enter the retention/detention System.
4) Inspect each manifold, all laterals, and outlet pipes for sediment build up, obstructions, or other problems. Obstructions should be removed at this time.
5) If measured sediment build up is between 5% - 20% of the pipe diameter, cleaning should be considered; if sediment build up exceeds 20%, cleaning should be performed at the earliest opportunity. A thorough cleaning of the system (manifolds and laterals) shall be performed by either manual methods or by a vacuum truck.

Stormwater Pollution . . . What You Should Know

Riverside County has two drainage systems - sewers and storm drains. The storm drain system was designed to reduce flooding by carrying excess rainwater away from streets and developed areas. The storm drain system does not provide water treatment. It is connected directly to our local waterways.

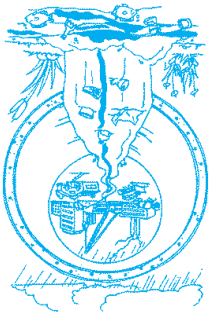

Unlike sanitary sewers, storm drains are not connected to a wastewater treatment plant – they flow directly to our local streams, rivers and lakes.

Stormwater runoff is a part of the natural hydrologic process. However, land development and construction activities can affect the natural drainage processes and introduce pollutants into stormwater runoff. Polluted stormwater runoff from construction sites has been identified as a major source of water pollution in California. It jeopardizes the quality of our local waterways and can pose a serious threat to the health of our aquatic ecosystems.

The Cities and County of Riverside Water Pollution Prevention Program

Because preventing pollution is much easier and less costly than cleaning up "after the fact," Cities and County of Riverside's "Only Rain Down the Storm Drain" Water Pollution Prevention Program informs residents and businesses on pollution prevention activities. This pamphlet describes various Best Management Practices (BMPs) that construction site operators can use to prevent stormwater pollution.

In accordance with applicable federal and state law, the Cities and County of Riverside have adopted ordinances for stormwater management that prohibit the discharge of pollutants into the storm drain system or local surface water. This includes discharges from construction sites containing sediment, concrete, mortar, paint, solvents, lubricants, vehicle fluids, fuel, pesticides, and construction debris.

PLEASE NOTE: The Federal, State and local regulations strictly prohibit the discharge of sediment and pollutants into the streets, the storm drain system or waterways. As an owner, operator or supervisor of a construction site, you may be held financially responsible for any environmental damage caused by your subcontractors or employees.

Water Pollution Prevention for Construction Activities

The two most common sources of stormwater pollution problems associated with construction activities are ***erosion*** and ***sedimentation***. Failure to maintain adequate erosion and sediment controls at construction sites often results in sediment discharges into the storm drain system, creating multiple problems once it enters local waterways.

Construction vehicles and heavy equipment can also track significant amounts of mud and sediment onto adjacent streets. Additionally, wind may transport construction materials and wastes into streets storm drains, or directly into our local waterways.

Water Pollution Prevention

What you should know for...

GENERAL CONSTRUCTION & SITE SUPERVISION

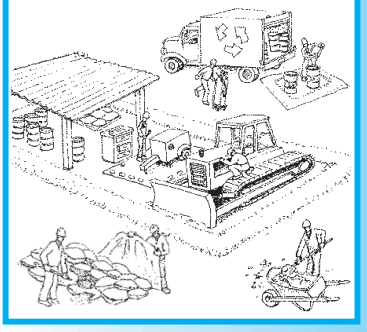

Best Management Practices (BMPs) for:

- Developers
- General Contractors
- Home Builders
- Construction Inspectors
- Anyone in the construction business

To report a hazardous materials spill, call:

During normal business hours
(7:00 a.m. to 5:30 p.m.)
Riverside County Department of Environmental Health
(951)-358-5172 or **1-888-722-4234**
www.rivcoeh.org.

After business hours, on weekends or holidays, call **(951)-782-2968**

In an emergency, dial **911**

For hazardous waste disposal information call:

(951) 358-5055

To report an illegal discharge or a clogged storm drain, call:

1-800-506-2555

For more information, please call the Riverside County's "Only Rain Down the Storm Drain" Water Pollution Prevention Program at 1-800-506-2555 or www.rcflood.org

ONLY RAIN DOWN THE STORM DRAIN

The "Only Rain Down the Storm Drain" Pollution Prevention Program acknowledges The City of Coronado for the information provided in brochure.

Resources

State Water Resources Control Board
Division of Water Quality
1001 I Street
Sacramento CA 95814
(916) 341-5455
www.swrcb.ca.gov/water_issues/programs/stormwater

Colorado River Basin Regional Water Quality Control Board - Region 7
73-720 Fred Waring Drive, Suite 100
Palm Desert, CA 92260
(760) 346-7491
www.waterboards.ca.gov/coloradoriver

Santa Ana Regional Water Quality Control Board - Region 8
3737 Main Street, Suite 500
Riverside, CA 92501-3348
(951) 782-4130
www.waterboards.ca.gov/santaana

San Diego Regional Water Quality Control Board - Region 9
2375 Northside Drive Suite 100
San Diego, CA 92108
(619) 516-1990
www.waterboards.ca.gov/sandiego

What Should You Do?
Advance Planning to Prevent Pollution

- ❑ Remove existing vegetation only as needed.
- ❑ Schedule excavation, grading, and paving operations for dry weather periods, if possible.
- ❑ Designate a specific area of the construction site, well away from storm drain inlets or watercourses, for material storage and equipment maintenance.
- ❑ Develop and implement an effective combination of erosion and sediment controls for the construction site.
- ❑ Practice source reduction by ordering only the amount of materials that are needed to finish the project.
- ❑ Educate your employees and subcontractors about stormwater management requirements and their pollution prevention responsibilities.
- ❑ Control the amount of surface runoff at the construction site by impeding internally generated flows and using berms or drainage ditches to direct incoming offsite flows to go around the site. ***Note:*** *Consult local drainage policies for more information.*

Best Management Practices

The following Best Management Practices (BMPs) can significantly reduce pollutant discharges from your construction site. Compliance with stormwater regulations can be as simple as minimizing stormwater contact with potential pollutants by providing covers and secondary containment for construction materials, designating areas away from storm drain systems for storing equipment and materials and implementing good housekeeping practices at the construction site.

- ❑ Protect all storm drain inlets and streams located near the construction site to prevent sediment-laden water from entering the storm drain system.
- ❑ Limit access to and from the site. Stabilize construction entrances/exits to minimize the track out of dirt and mud onto adjacent streets. Conduct frequent street sweeping.
- ❑ Protect stockpiles and construction materials from winds and rain by storing them under a roof, secured impermeable tarp or plastic sheeting.
- ❑ Avoid storing or stockpiling materials near storm drain inlets, gullies or streams.
- ❑ Phase grading operations to limit disturbed areas and duration of exposure.
- ❑ Perform major maintenance and repairs of vehicles and equipment offsite.
- ❑ Wash out concrete mixers only in designated washout areas at the construction site.
- ❑ Set-up and operate small concrete mixers on tarps or heavy plastic drop cloths.
- ❑ Keep construction sites clean by removing trash, debris, wastes, etc. on a regular basis.
- ❑ Clean-up spills immediately using dry clean-up methods (e.g., absorbent materials such as cat litter, sand or rags for liquid spills; sweeping for dry spills such as cement, mortar or fertilizer) and by removing the contaminated soil from spills on dirt areas. .
- ❑ Prevent erosion by implementing any or a combination of soil stabilization practices such as mulching, surface roughening, permanent or temporary seeding.
- ❑ Maintain all vehicles and equipment in good working condition. Inspect frequently for leaks, and repair promptly.
- ❑ Practice proper waste disposal. Many construction materials and wastes, including solvents, water-based paint, vehicle fluids, broken asphalt and concrete, wood, and cleared vegetation can be recycled. Materials that cannot be recycled must be taken to an appropriate landfill or disposed of as hazardous waste.
- ❑ Cover open dumpsters with secured tarps or plastic sheeting. Never clean out a dumpster by washing it down on the construction site.
- ❑ Arrange for an adequate debris disposal schedule to insure that dumpsters do not overflow.

General Construction Activities Stormwater Permit
(Construction Activities General Permit)

The State Water Resources Control Board (SWRCB) adopted a new Construction Activities General Permit (Order No. 2010-0014-DWQ) on September 2, 2009, This permit is administered and enforced by the SWRCB and the local Regional Water Quality Control Boards (RWQCB). The updated Construction Activities General Permit establishes a number of new stormwater management requirements for construction site operator.

NOTE: *Some construction activies stormwater permits are issued on a regional basis. Consult your local RWQCB to find out if your project requires coverage under any of these permits.*

Frequently Asked Questions:

How do I know if I need a Construction Activities General Permit?

If your construction project requires a land disturbance of one acre or more, or less than one acre but part of a larger common plan of development or sale.

How do I obtain coverage under the Construction Activities General Permit?

The Legally Responsible Person (LRP) must electronically submit Permit Registration Documents (PRDs) prior to commencement of construction activities in the Storm Water Multi-Application Report Tracking System (SMARTS).

PRDs consist of the Notice of Intent, Risk Assessment, Post-Construction Calculations, a Site Map, the SWPPP, a signed certification statement by the LRP, and the first annual fee. Once these components have been submitted and are deemed complete by the SMARTS system, a WDID number will automatically be emailed to the LRP.

What must I do to comply with the requirements of the Construction Activities General Permit?

- Have a qualified SWPPP Developer (QSD) prepare a Stormwater Pollution Prevention Plan (SWPPP) prior to commencing construction activities.
- Have a qualified SWPPP Practitioner (QSP) implement the SWPPP.
- Keep a copy of the SWPPP at the construction site for the entire duration of the project.
- Implement an effective combination of erosion and sediment control on all soil disturbed areas.
- Conduct site inspections prior to anticipated storm events, every 24-hours during extended storm events, and after an actual storm event.
- Implement BMPs for non-stormwater discharges year-round.
- Perform repair and maintenance of BMPs as soon as possible after storm events depending upon worker safety.
- Update the SWPPP as needed, to manage pollutants or reflect changes in site conditions.
- Include description of post construction BMPs at the construction site, including parties responsible for long-term maintenance.

NOTE: *Please refer to the Construction Activities General Permit for detailed information. You may contact the SWRCB, your local RWQCB, or visit the SWRCB website at www.swrcb.ca.gov/water_issues/programs/stormwater/ for more information.*

Revised July 2014